WITTENSTEIN | alpha

SK+ ATEX

Operating Manual

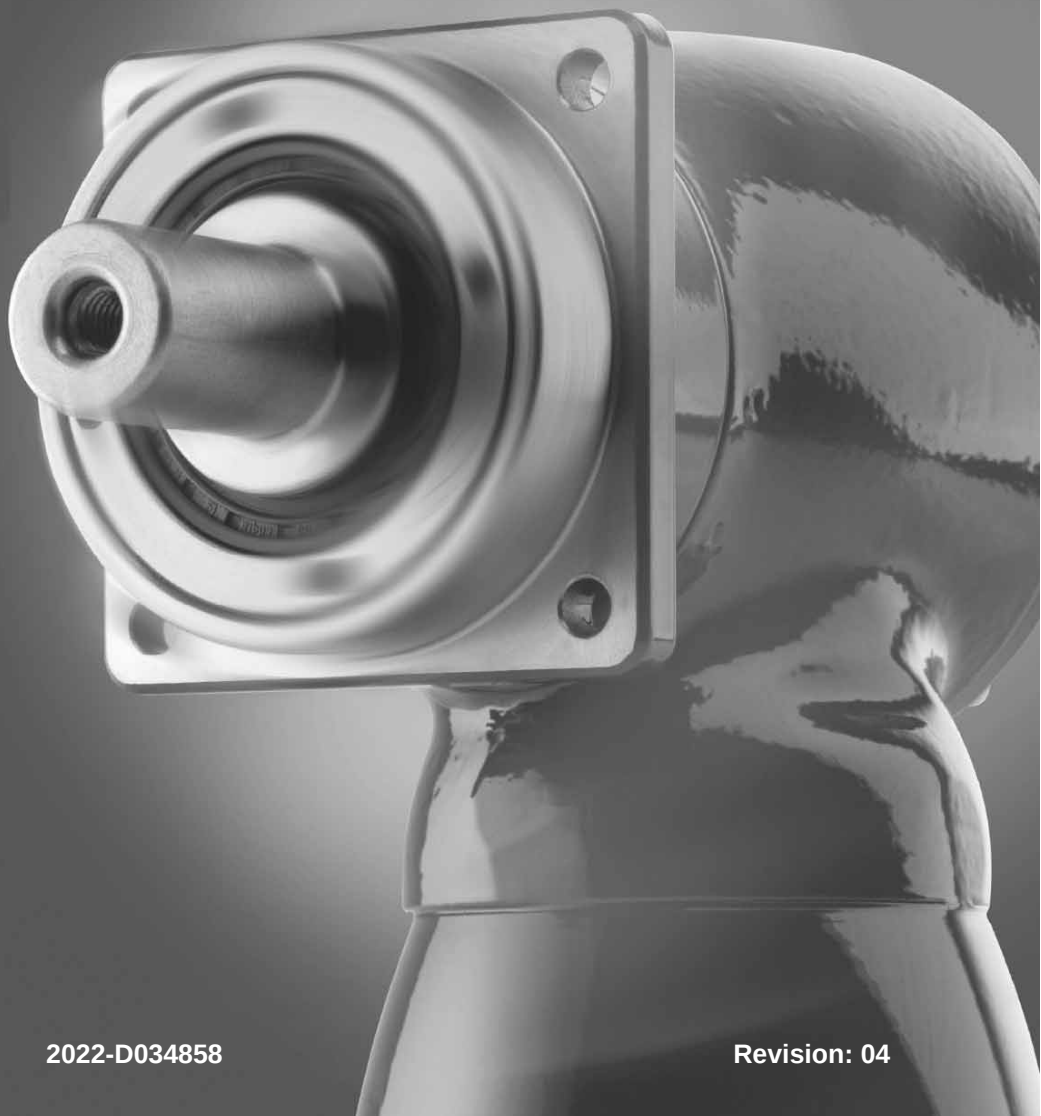

2022-D034858

Revision: 04

Revision history

Revision	Date	Comment	Chapter
01	18.12.2009	New Version	All
02	31.08.2010	2-stage design	1, 3, 5, 7, 9
02a	03.12.2012	Translation corrections	2.4, 7.3
03	29.05.2015	Lubricant	3.1, 9.5
04	10.03.2016	2014/34/EU	2.1, 2.4, 3.1, 3.2, 3.4.1, 9.6

Service

In case you have technical questions,
please contact:

WITTENSTEIN alpha GmbH

Customer Service
Walter-Wittenstein-Straße 1
D-97999 Igersheim

Tel.: +49 7931 493-12900

Fax: +49 7931 493-10903

E-mail: service-alpha@wittenstein.de

© WITTENSTEIN alpha GmbH 2016

This documentation is copyright protected.

WITTENSTEIN alpha GmbH reserves all the rights to photo-mechanical reproduction, copying, and the distribution by special processes (such as computers, file media, data networks), even in parts.

Subject to technical and content changes without notice..

Contents

1 Regarding this manual ... 3
1.1 Signal words ... 3
1.2 Safety symbols ... 3
1.3 Design of the safety instructions ... 4
1.4 Information symbols ... 4

2 Safety ... 5
2.1 EU directive for devices and protective systems in areas with explosion hazards ... 5
2.2 Dangers ... 5
2.3 Personnel ... 5
2.4 Intended use ... 5
2.5 Reasonably predictable misuse ... 6
2.6 Guarantee and liability ... 6
2.7 General safety instructions ... 6

3 Description of the gearhead ... 9
3.1 Type plate ... 9
3.1.1 Atex identification in gas atmospheres with explosion hazard ... 10
3.1.2 Atex identification in dust-air atmosphere with explosion hazard ... 10
3.2 Ordering code ... 10
3.3 Performance statistics ... 10
3.4 Dimensioning ... 11
3.4.1 Inspection ... 11
3.5 Weight ... 11
3.6 Noise emission ... 11

4 Transport and storage ... 12
4.1 Scope of delivery ... 12
4.2 Packaging ... 12
4.3 Transport ... 12
4.3.1 Transport of gearheads up to and including size SK+ 140 ... 12
4.3.2 Transport of gearheads as of size SK+ 180 ... 12
4.4 Storage ... 12

5 Assembly ... 13
5.1 Preparations ... 13
5.2 Installation conditions ... 13
5.3 Mounting the motor onto the gearhead ... 13
5.4 Mounting gearhead on a machine ... 15
5.5 Mounted components on the gear output side ... 15

6 Startup and operation ... 16
6.1 Note during startup ... 16
6.2 Inadmissible operational conditions ... 17
6.3 Check running-in behavior ... 17

7 Maintenance and disposal ... 18
7.1 Maintenance work ... 18
7.1.1 Visual/Noise inspection ... 18
7.1.2 Checking the tightening torques ... 18
7.1.3 Check for leakage ... 18
7.1.4 Replacing the gearhead ... 18
7.2 Startup after maintenance work ... 19
7.3 Maintenance schedule ... 19
7.4 Notes on the lubricant used ... 19
7.5 Disposal ... 19

8 Malfunctions ... 20

9 Appendix 21
9.1 Specifications on mounting onto a motor 21
9.2 Specifications on mounting onto a machine 22
9.3 Tightening torques for common thread sizes in general mechanics 22
9.4 Technical specifications 23
9.4.1 Technical specifications for SK+ 060 for use in areas with explosion hazards 23
9.4.2 Technical specifications for SK+ 075 for use in areas with explosion hazards 25
9.4.3 Technical specifications for SK+ 100 for use in areas with explosion hazards 28
9.4.4 Technical specifications for SK+ 140 for use in areas with explosion hazards 30
9.4.5 Technical specifications for SK+ 180 for use in areas with explosion hazards 33
9.5 Lubricant quantity 35
9.6 Declaration of Conformity 36

1 Regarding this manual

These instructions contain necessary information for the safe operation of the angle gear SK+ in areas with explosion hazards, referred to as gearhead in the following.

The operator must make sure that this operating manual is read through by all persons assigned to install, operate, or maintain the gearhead, and that they understand them.

Store these instructions within reach near the gearhead.

These **safety instructions** should be shared with colleagues working in the vicinity of the device to ensure individual safety.

The original instructions were prepared in German; all other language versions are translations of these instructions.

1.1 Signal words

The following signal words are used to bring your attention to dangers, prohibitions, and important information:

	⚠ DANGER
	This signal word points out to an imminent danger that can cause serious injuries and even death.
	⚠ WARNING
	This signal word points out to a possible danger that can cause serious injuries and even death.
	⚠ CAUTION
	This signal word points out to a possible danger that can cause slight to serious injuries.
	NOTICE
	This signal word points out to a possible danger that can cause material damage.
	A note without signal word draws your attention to application tips or especially important information when handling the gearhead.

1.2 Safety symbols

The following safety symbols are used to bring your attention to dangers, prohibitions, and important information:

General danger

Hot surface

Suspended loads

Danger of being pulled in

Environment protection

Information

Explosion

Electric voltage

1.3 Design of the safety instructions

The safety instructions of this operating manual are designed according to the following pattern:

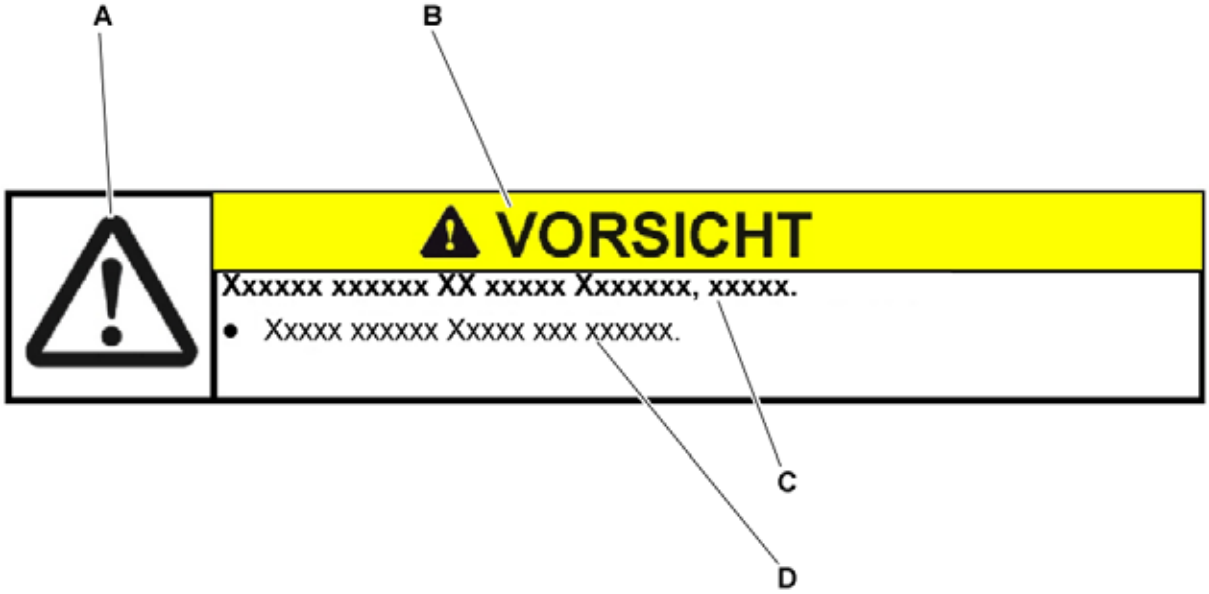

A = Safety symbol (see Chapter 1.2 "Safety symbols")
B = Signal word (see Chapter 1.1 "Signal words")
C = Type and consequence of the danger
D = Prevention of the danger

1.4 Information symbols

The following information symbols are used:

- requires you to carry out an action
  - ➲ indicates the results of an action

ⓘ provides additional information on handling

An "explosion protection symbol" indicates information on handling in areas with explosion hazards.

2 Safety

These instructions, especially the safety instructions and the rules and regulations valid for the operating site, must be observed by all persons working with the gearhead.

In addition to the safety specifications mentioned in this operating manual, the general and also the local regulations on the prevention of accidents and on environmental protection should be observed.

2.1 EU directive for devices and protective systems in areas with explosion hazards

According to Directive 2014/34/EU, the gearhead is considered a device that is installed together with other devices in a machine. A declaration of conformity for this gearhead can be found in the appendix (see Chapter 9.6 "Declaration of Conformity").

Operation is prohibited within the area of validity of the directive until it has been determined that the machine in which this product is installed corresponds to the regulations within this directive.

2.2 Dangers

The gearhead has been constructed according to current technological standards and accepted safety regulations.

To avoid danger to the operator or damage to the machine, the gearhead may be put to use only for its intended usage (see chapter 2.4 "Intended use") and in a technically flawless and safe state.

- Be informed of the general safety instructions before beginning work. (see Chapter 2.7 "General safety instructions").

2.3 Personnel

Only persons who have read and understood these instructions may carry out work on the gearhead.

2.4 Intended use

The gearhead serves to convert torques and speeds. It is designed for industrial applications.

The gearhead can be used in areas with explosion hazard group II, zones 1 and 2, and zones 21 and 22, thus in the device categories 2 and 3. The gearhead can be operated in a gas atmosphere in temperature class T3. In a dust atmosphere, a maximum surface temperature of 150 °C is possible.

- Observe the instructions on the identification plate and the appendix on the written certificate of conformity.

The gearhead is manufactured and certified for use in areas with explosion hazards in compliance with standard EN 13463 standard and the following EC/EU Directive :

- **94/9/EC** valid until 19 April 2016 [time of production]
- **2014/34/EU** valid until 20 April 2016 [time of production]

- Strictly observe the restrictions of speeds and torques (see Chapter 9.4 "Technical specifications").
- Only use the gearbox in cyclic duty operation (S5).
- Our Customer Service department (technical customer service) is available to answer any questions.

The gearhead is intended for installation on motors that:

- Correspond to the design B5 (in the event of deviations, consult our Customer Service department [technical Customer Service department]).
- Have a radial and axial runout tolerance according to DIN EN 50347
- Have a smooth shaft.
- Feature at least the same temperature class as the gearhead.

  ⓘ We recommend temperature class T3 and higher, because the gearhead may not be allowed to heat up to over 90°C in normal conditions. The gearhead can be heated additionally through heat connection to the motor, and thus reach a higher housing temperature than 90 °C. The performance of our gearhead in explosion-risk areas would therefore no longer be guaranteed.

2.5 Reasonably predictable misuse

Any use transgressing the maximum permitted speeds, torques and temperature (especially ignoring the regulations on explosion protection) is not compliant with the regulations, and thus prohibited.

2.6 Guarantee and liability

Guarantee and liability claims are excluded for personal injury and material damage in case of

- Ignoring the information on transport and storage
- Improper use (misuse)
- Improper or neglected maintenance and repair
- Improper assembly / disassembly or improper operation
- Operation of the gearhead when safety devices and equipment are defective
- Operation of the gearhead without lubricant
- Operation of a heavily soiled gearhead
- Operating the gearhead despite leakage or unusual running noises

- Operating the gearhead in an atmosphere whose ignition temperature lies under the temperature class specified on the type plate.
- Modifications or reconstructions that have been executed without written approval of **WITTENSTEIN alpha GmbH**

2.7 General safety instructions

⚠ DANGER

Operating the gearhead in areas for which it is not approved can lead to explosions that can cause serious injuries and even death.

- Make sure that the gearhead is only used in those areas for which it is permitted according to the identification plate (see Chapter 3.1 "Type plate").

⚠ DANGER

Assembly and maintenance in areas with explosion hazards can lead to explosions that can cause serious injuries and even death.

- Be certain that there is no explosive atmosphere during assembly and maintenance.

Ex	Table "Tbl-1" lists a summary of the possible hazards, their causes and protective measures for areas with explosion hazards.

Ex	Dangers	Possible causes	Protective measures
	Hot surfaces	Increased friction and dissipated power because of wear, improper assembly, overload, or leaks.	Reduction of the torques and speeds in comparison to standard gears
			Limiting the motor current and maximum speed of the motor
			Maintenance intervals for wear parts and lubrication according to maintenance schedule
			Inspection of the temperature behavior and the running-in behavior before startup
			Regular visual and acoustic inspections
			Prohibition of certain mounting positions and conditions
		Increased surface temperature because of dust deposits.	Cleaning regulations according to maintenance plan
	Mechanically caused sparks	Overload on shafts, moving parts and connection elements.	Reduction of the torques and external loads in comparison to standard gears
			Limiting the motor current of the motor
			Maximum load test before startup
	Electrostatic loading	Potential differences between components, cleaning processes, insulating layers	Grounding the gearhead and the motor

Tbl-1: Summary of the hazards and protective measures for areas with explosion hazards

⚠ WARNING

Objects flung out by rotating components can cause serious injuries.

- Remove objects and tools from the gearhead before putting it into operation.

⚠ WARNING

Rotating components on the gearhead can pull in parts of the body and cause serious injuries and even death.

- Keep a sufficient distance to rotating machinery while the gearhead is running.
- Secure the machine against restarting and unintentional movements during assembly and maintenance work.

⚠ WARNING

A damaged gearhead can cause accidents and injury.

- Never use a gearhead that has been overloaded to due misuse or a machine crash (see chapter 2.5 "Reasonably predictable misuse").
- Replace the affected gearhead, even if no external damage is visible.

⚠ CAUTION

Hot gearhead housing can cause serious burns.

- Touch the gearhead housing only when wearing protective gloves or after the gearhead has been at standstill for some time.

NOTICE

Loose or overloaded screw connections can damage the gearhead.

- Use a calibrated torque wrench to tighten and check all screw connections for which tightening torques have been specified.

Solvents and lubricants can pollute soil and water.

- Use and dispose of cleaning solvents as well as lubricants appropriately.

3 Description of the gearhead

The gearhead is a single- or two-stage, low-backlash angle gear, which is manufactured as standard in the "M" version (motor installation).

Motor centering is performed:

- up to gearhead size SK+ 100 and a motor shaft diameter of 28 mm by the clamping hub (plug receptacle or coupling)
- from gearhead size SK+ 140 and a motor shaft diameter of >28 mm by the centering collar of the motor

A radial distortion of the motor is avoided.

Adaptation to various motors is done by an adapter plate and a bushing.

The gearhead is equipped with an integrated linear length compensation to compensate for the expansion of the motor shaft when heated up.

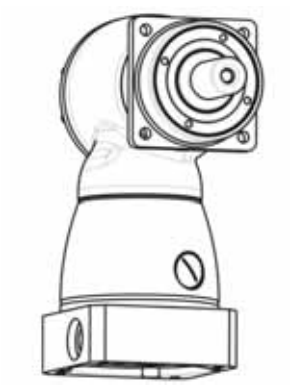

The output shaft is available in the following forms:

- Smooth face
- With feather key groove (according to DIN 6885)
- With involute (according to DIN 5480)

3.1 Type plate

The type plate is attached to the gearhead housing.

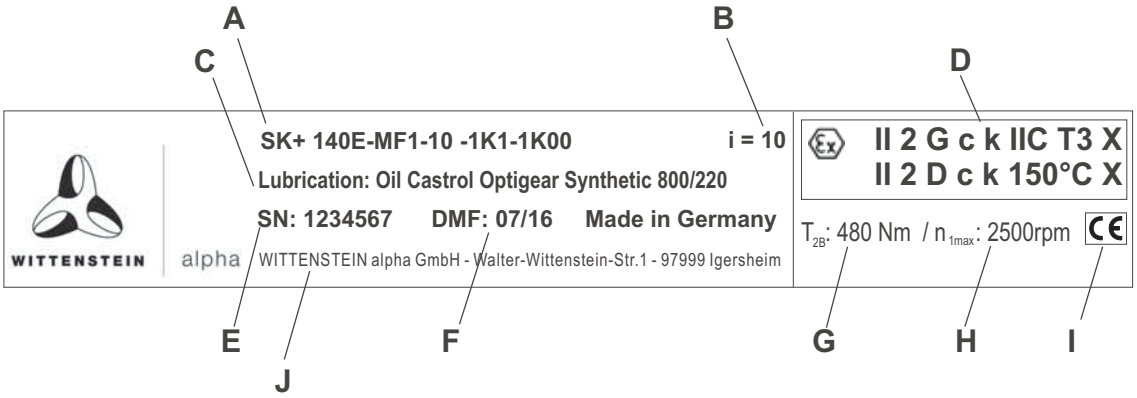

A	Ordering code (see Chapter 3.2 "Ordering code")	F	Production date
B	Ratio	G	Maximum permitted gear output torque T_{2B}
C	Lubricant	H	Maximum permitted drive speed n_{1Max}
D	Atex identification	I	CE identification
E	Serial number	J	Name and address of manufacturer

Tbl-2: Type plate (sample values)

3.1.1 Atex identification in gas atmospheres with explosion hazard

		Designation
Ex II 2 G c k IIC T3 X (L, M, N)	L	Group, category
	M	Type of ignition protection, explosion group, temperature class
	N	Ambient temperature

Tbl-3: Type plate (sample values)

3.1.2 Atex identification in dust-air atmosphere with explosion hazard

		Designation
Ex II 2 D c k 150°C X (L, M, N)	L	Group, category
	M	Type of ignition protection, maximum surface temperature
	N	Ambient temperature

Tbl-4: Type plate (sample values)

3.2 Ordering code

SK+ 140E - M F 1-10-1 K 1

Gearhead type
SK+ 060/075/100/140/180

Type Code
E = Explosion protected according to 2014/34/EU

Gearhead variations
M = Motor-mounted gearhead

Gearhead model
F = Standard (for Cyclic duty S5)

Number of stages
1 = 1-stage
2 = 2-stages

Backlash
1 = Standard

Bore diameters of the clamping hub
see catalogue

Output shaft
0 = Smooth shaft
1 = Shaft with key DIN6885 Form A
2 = Involute to DIN5480

Ratio i

Refer to our catalog or our website at www.wittenstein-alpha.de for further information.

3.3 Performance statistics

Based on test results, torques and speeds are reduced in relation to the standard gearhead. The shaft loads are also reduced in relation to the standard gear. Refer to Chapter 9.4 "Technical specifications".

⚠ DANGER

Deviant values can cause the loss of explosion protection.

- If values are divergent, please consult our Customer Service.

3.4 Dimensioning

⚠ DANGER

Erroneous dimensioning and inspection may lead to loss of explosion protection.

- Please observe all instructions in this chapter.

- Adopt the construction according to specifications in the total catalogue, Chapter "Information" or "Detailed construction", or contact **WITTENSTEIN alpha GmbH**.
- Note the reduced output specifications in construction according to Chapter 9.4 "Technical specifications".
- Please consult our Customer Service Department if you have any questions.
- Note the instructions in Chapter 7.1.4 "Replacing the gearhead", if the calculated **bearing life is less than 20,000 h**.
- Prevent gearhead overloading by the motor by limiting motor current and motor speed.
- Clarify the chemical stability of the gearhead for every individual case so as to avoid a premature failure of a shaft seal or corrosion on the gearhead.

  This also includes water and steam, which can cause corrosion. Contact **WITTENSTEIN alpha GmbH** about this.

3.4.1 Inspection

- Ensure that the connection of the motor to the gearhead corresponds to the required protection types (according to EN 60529):
  - in dust atmosphere IP6x,
  - in gas atmosphere IP54.

ⓘ The required protection types can be achieved for example by the following measures:

- Use surface-bonding agent between motor flange and adapter plate.
- Use sealing plates between motor flange and adapter plate to seal the through-holes of the adapter plate.

  Sealing plates are available upon request from **WITTENSTEIN alpha GmbH**.

3.5 Weight

The table "Tbl-5" specifies the gearhead dimensions with medium-sized adapter plate. If another adapter plate is mounted, the actual dimensions can deviate by up to 10%.

Gearhead size SK+	060	075	100	140	180
1–stage [kg]	2,9	4,8	9,3	22,6	45,4
2–stage [kg]	3,2	5,4	10,0	25,0	48,0

Tbl-5: Weight

3.6 Noise emission

Depending on the gearhead type and product size, the continuous sound pressure level is up to 68 dB(A).

Specifications on your specific product can be found in Chapter 9.4 "Technical specifications".

4 Transport and storage

4.1 Scope of delivery

- Check the completeness of the delivery against the delivery note.

  ⓘ Missing parts or damage must be notified immediately in writing to the carrier, the insurance, or **WITTENSTEIN alpha GmbH**.

4.2 Packaging

The gearhead is delivered packed in foil and cardboard boxes.

- Dispose of the packaging materials at recycling sites intended for that. Observe the locally valid regulations for disposals.

4.3 Transport

NOTICE

Hard knocks, for instance because of falling or hard dropping, can damage the gearhead.

- Only use hoisting equipment and transports with sufficient capacity.
- The maximum permitted lift capacity of a hoist may not be exceeded.
- Lower the gearhead slowly.

⚠ WARNING

Suspended loads can fall and can cause serious injuries and even death.

- Do not stand under suspended loads.

Specifications on the weights, refer to Chapter 3.5 "Weight".

4.3.1 Transport of gearheads up to and including size SK+ 140

No special transport mode is prescribed for transporting the gearhead.

4.3.2 Transport of gearheads as of size SK+ 180

Gearheads from the size SK+ 180 have support bores (B) for ring screws (e.g. according to DIN 580). The ring screws are used for attaching the gearhead securely to the hoisting equipment.

	Gearhead size SK+	Support bore (B) [Ø] x depth [mm]
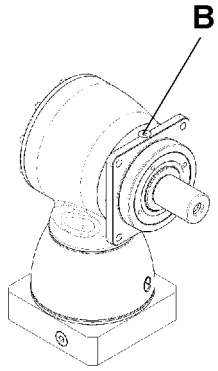	180	M8 x 14

Tbl-6: Support bores on the gearhead

4.4 Storage

Store the gearhead in horizontal position and dry surroundings at a temperature of 0 °C to +40 °C in the original packaging. Store the gearhead for a maximum of 2 years.

For storage logistics, we recommend the "first in – first out" method.

5 Assembly

- Be informed of the general safety instructions before beginning work.
  (see Chapter 2.7 "General safety instructions").

5.1 Preparations

NOTICE

Pressurized air can damage the gearhead seals.

- Do not use pressurized air to clean the gearhead.

NOTICE

Directly sprayed cleaning agents can alter the frictional values of the clamping hub.

- Only spray cleaning agents onto a cloth, with which you can then clean the clamping hub.

- Clean / De-grease the following components with a clean and lint-free cloth and grease-dissolving, non-aggressive detergent:
  - All fitting surfaces to neighboring components
  - Centering
  - The motor shaft
  - The inside diameter of the clamping hub
  - The bushing inside and out
- Dry all fitting surfaces to neighboring components in order to achieve the proper friction values of the screw connections.
- Check the fitting surfaces additionally for damage and impurities.

5.2 Installation conditions

- Provide a metallic frame for connection of the gear reducer.
- Provide a ground in the areas of the motor gear and gear-gear connection, so as to prevent any electrostatic charge that may arise.

5.3 Mounting the motor onto the gearhead

⚠ WARNING

A damaged coupling can cause ignition dangers.

- Align the shaft ends of the motor and gearhead precisely. The offset values in table "Tbl-9" must **definitely** be maintained.

- Observe the general information and safety instructions of the motor manufacturer.
- Observe the safety and processing instructions of the screw-bonding agents to be used.

ⓘ Ensure that the motor is mounted if possible in a vertical direction.

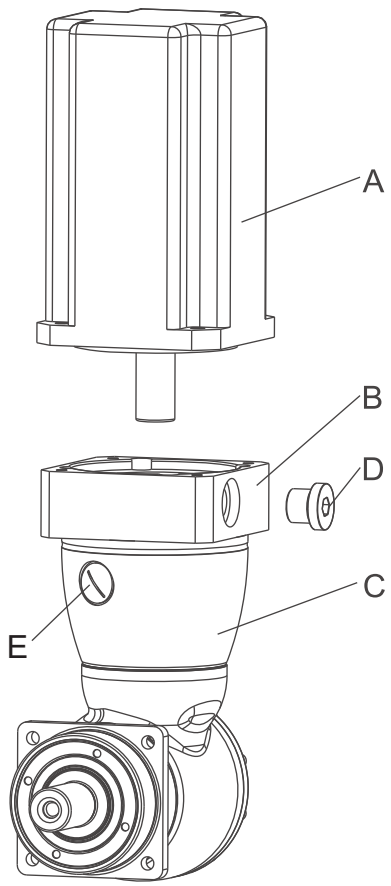

- If the motor shaft has a feather key, remove the feather key.
  - ⓘ If recommended by the motor manufacturer, apply a half wedge.
- Remove the plug (D) from the mounting bore in the adaptor plate (B).
- Under **no circumstance** remove the plug (E) in the **housing**.
- Turn the clamping hub (I) until the clamping bolt (H) can be reached over the mounting bore.
- Release the clamping bolt (H) of the clamping hub (I) with one revolution.
- Push the motor shaft into the clamping hub of the gearhead.
  - ⓘ The motor shaft should slip in easily. If this is not the case, the clamping bolt must be loosened more.
  - ⓘ A slotted spacer sleeve has to be installed extra for certain motor shaft diameters and applications.
  - ⓘ The slot of the spacer sleeve (if provided) and clamping hub have to be flush with the groove (if provided) of the motor shaft, see table "Tbl-7".
  - ⓘ No gap is premitted between motor (A) and the adaptor plate (B).

		Designation
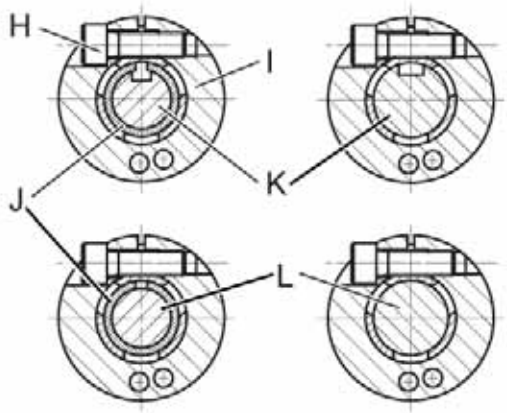	H	Clamping bolt
	I	Clamping hub
	J	Spacer sleeve
	K	Grooved shaft
	L	Smooth shaft

Tbl-7: Arrangement of motor shaft, clamping hub and spacer sleeve

- Apply screw-bonding agent to the four screws (e.g. Loctite 243).
- Fasten the motor (A) onto the adaptor plate (B) with the four screws.
- If it concerns a **single stage gearhead (MF1)** , smear screw-bonding agent (for example Loctite 243) onto the clamping bolt (H).
- Tighten the clamping bolt (H) of the clamping hub (I).
  - ⓘ For screw sizes and specified torques refer to chapter 9.1 "Specifications on mounting onto a motor", table "Tbl-13".
- Screw in plug (D) of the adaptor plate (B).
  - ⓘ For screw sizes and specified torques refer to table "Tbl-8".

Width across flats [mm]	5	8	10
Tightening torque [Nm]	10	35	50

Tbl-8: Torques for the plugs

Gearhead size SK+	060	075	100	140	180
Axial offset [mm]	± 0,25	± 0,3	± 0,4	± 0,5	± 0,6
Angle offset [°]	0,2	0,2	0,2	0,2	0,2

Tbl-9: Permissible offset of the coupling, gearhead singlestaged (MF1)

5.4 Mounting gearhead on a machine

- Observe the safety and processing instructions of the screw-bonding agents to be used.

- Smear screw-bonding agent (e.g. Loctite 243) onto the fastening bolts.
- Fasten the gearhead on the machine with the bolts through the holes.
  - ⓘ Mount the gearhead in such a way that the type plate remains legible.
  - ⓘ Do not use washers (e.g. plain washers, tooth lock washers).
  - ⓘ For screw sizes and specified torques refer to chapter 9.2 "Specifications on mounting onto a machine", table "Tbl-14".

5.5 Mounted components on the gear output side

NOTICE

Distortions during mounting operations can damage the gearhead.

- Mount gearwheels and toothed belt pulleys onto the output shaft without forcing.
- Do not on any account attempt an assembly by force or hammering!
- Only use suitable tools and equipment for assembly.
- If you pull on or shrink-fit a gear wheel onto the output shaft, you must make sure that the maximum permitted static axial forces of the output bearing (F_{2AMax} see Chapter 9.4 "Technical specifications") are not exceeded.

6 Startup and operation

- Be informed of the general safety instructions before beginning work. (see Chapter 2.7 "General safety instructions").

⚠ DANGER

Operating the gearhead in areas for which it is not approved can lead to explosions that can cause serious injuries and even death.

- Make sure that the gearhead is only used in those areas for which it is permitted according to the identification plate (see Chapter 3.1 "Type plate").

- Check the gearhead before startup for possible damage, especially the radial shaft seal on the gear output.

⚠ DANGER

A damaged gearhead can lead to explosions that can cause serious injuries and even death.

- **Never** operate damaged or abnormally running or sounding gearheads in an area of explosion hazard.

6.1 Note during startup

Improper use can cause damage to the gearhead and cause ignition dangers.

- Make sure that
  - the **ambient temperature** does not drop below 0 °C or exceed +40 °C and
  - the **operating temperature** does not exceed +90 °C.
  - the gearhead is mounted in the mounting positions depicted below to ensure the lubrication of all gearhead components.
- For other conditions of use and other mounting positions as those depicted below (e.g. tilting by an axis of these mounting positions), please consult our Customer Service Department.

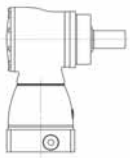

Mounting position B5/V3 (output shaft horizontal, motor shaft upwards)

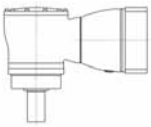

Mounting position V1/B5 (output shaft downwards, motor shaft horizontal)

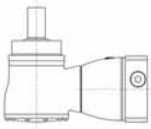

Mounting position V3/B5 (output shaft upwards, motor shaft horizontal)

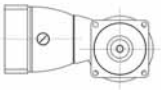

Mounting position B5/B5 (output shaft horizontal, motor shaft horizontal)

- Prevent gear reducer from overloading by limiting the motor current and the maximum motor speed. Otherwise, the drive output should be switched off in case the motor temperature rises 10 °C above the usual operational temperature.
- Use the gearhead only in a clean and dry environment. Please consult our Customer Service Department if your gearhead is subjected to course dust or any kind of liquids during operation.

6.2 Inadmissible operational conditions

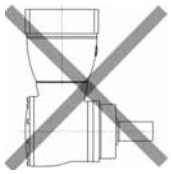

The following operational conditions are not permitted:

- Mounting position B5/V1 (output shaft horizontal, motor shaft downwards)
- Co-riding the gearhead on the drive axle is prohibited. Exceptions require a written approval and technical statement from **WITTENSTEIN alpha GmbH**.
- Use during permanent operation (S1 operation: power-on time greater than 60% or longer than 20 minutes)

6.3 Check running-in behavior

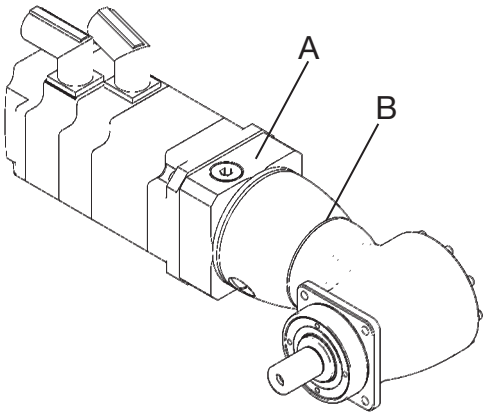

- After 4 running hours in maximum operating conditions, check the gearhead for leakage between gear and motor and on the output shaft seal.
- Measure the surface temperature on the input flange (A) and on the housing (B). Consult our Customer Service Department if the temperature exceeds +90 °C.
- Check the proper assembly of the clamping hub before startup by a maximum load test.

Increased running noises may be caused by faulty motor mounting.

- If so, mount onto motor again according to the operating manual, or consult our Customer Service Department.

7 Maintenance and disposal

- Be informed of the general safety instructions before beginning work.
  (see Chapter 2.7 "General safety instructions").

7.1 Maintenance work

The following maintenance work is crucial for the explosion protection.

- Perform these tasks thoroughly and diligently.

7.1.1 Visual/Noise inspection

- Dust off the housing. Make sure that the deposit of dust layers on the housing never exceeds a layer thickness of 5 mm.
- Check the entire gearhead for exterior damage and corrosion.
- Check the clamping hub for external damage when you inspect the tightening torques of the clamping bolt.
- Check the gearhead for unusual running noises and vibrations during operation.

ⓘ Please contact our Customer Service if you have any questions regarding maintenance.

7.1.2 Checking the tightening torques

- Check the tightening torque of the fastening bolts on the gearhead housing.

  ⓘ You can find the prescribed tightening torques in chapter 9.2 "Specifications on mounting onto a machine", table "Tbl-14".
- Check the tightening torque of the clamping bolt on the motor mounting.

  ⓘ You can find the prescribed tightening torques in chapter 9.1 "Specifications on mounting onto a motor", table "Tbl-13".

7.1.3 Check for leakage

- Check the gear output radial shaft seal for leakage.
- Look for external emission of lubricant from the drive.

⚠ DANGER

When opening up the Ermeto coupling, dust could collect on the adapter plate and catch fire during later operation.

- Make sure that **no** explosive dust-air mixture is present and **no** dust can get into adapter plate before opening the Ermeto coupling or dismantling the motor.

- Open up the Ermeto screw connection in the adapter plate and check for any lubricant emission inside the adapter plate.
- If you detect a leak, remove the lubricant and check the inside of the adapter plate once more after a brief operation. Lubricant discharge should stop after a short time.
- In case lubricant still is emitted, shut down the gearhead and consult our Customer Service.

7.1.4 Replacing the gearhead

- Replace the gearhead:
  - When 90 % of the calculated life of the gear output bearing has been reached (see "Cymex®" design or total catalogue: Chapter "Information" or "Detailed construction").
  - At the latest after a total of 20,000 operating hours.

  ⓘ Alternatively, the gearhead can be checked by **WITTENSTEIN alpha GmbH** and if necessary, released for further operation.

7.2 Startup after maintenance work

- Clean the outside of the gearhead.
- Attach all safety devices.
- Do a trial run before releasing the gearhead again for operation.

7.3 Maintenance schedule

Maintenance work	At initial startup	After running-in (4 hours)	After every 500 operating hours or 3 months	Every 5,000 operating hours	Every 10,000 operating hours
Visual/Noise inspection	X	X	X	-	-
Checking the tightening torques	X	X	X	-	-
Check running-in behavior (see Chapter 6.3 "Check running-in behavior")	-	X	-	-	-
Check for leakage	X	X	X	-	-
Exchange the radial shaft seal on the drive [1)]	-	-	-	X	-
Exchange the radial shaft seal on gear output [1)]	-	-	-	-	X
Perform an oil change [1)]	-	-	-	X	-
Replace gearhead after reaching 90% of the calculated nominal bearing life, but at the **latest** after 20,000 operating hours.					
[1)] Please consult our Customer Service Department concerning this. You will receive the necessary documents, spare parts, information and upon request training by our Customer Service.					

Tbl-10: Maintenance schedule

7.4 Notes on the lubricant used

All gearheads are filled by the manufacturer with synthetic gear oil (polyglycols) of viscosity class ISO VG100, ISO VG220.

The lubricant type and quantity can be found in the chapter 9.5 "Lubricant quantity".

The lubricant level lies within its minimal and maximum values in any approved mounting position with the correct lubricant quantity. The maximum usual pressure that may prevail in the gearhead during operation lies at 0.5 bar.

ⓘ You can receive further information on the lubricants directly from the manufacturer:
Castrol Industrie GmbH, Mönchengladbach
Tel.: + 49 (0) 21 61 / 9 09 - 30

7.5 Disposal

Consult our Customer Service Department for supplementary information on exchanging the adapter plate, on disassembly, and on disposal of the gearhead.

- Dispose of the gearhead at the recycling sites intended for this purpose.
  ⓘ Observe the locally valid regulations for disposals.

8 Malfunctions

NOTICE

Changed operational behavior can be an indication of existing damage to the gearhead or cause damage to the gearhead.

- Do not put the gearhead back into operation until the cause of the malfunction has been rectified.

Rectifying of malfunctions may be done by only by especially trained technicians.

Fault	Possible cause	Solution
Increased operating temperature	The gearhead is not suited for the task.	Check the technical specifications.
	Motor is heating the gearhead.	Check the wiring of the motor.
		Ensure adequate cooling.
		Change the motor.
	Ambient temperature too high.	Ensure adequate cooling.
Increased noises during operation	Distortion in motor mounting	Please consult our Customer Service Department.
	Damaged bearings	
	Damaged gear teeth	
Loss of lubricant	Lubricant quantity too high	Wipe off discharged lubricant and continue to watch the gearhead. Lubricant discharge must stop after a short time.
	Seals not tight	Please consult our Customer Service Department.
Clamp connection is slipping	Clamping bolt not tightened properly	Check the shaft seat and hub bore for damages. Replace damaged parts. Check the screw for proper tightening torque and secure it against loosening by itself. Check the operating parameters.
	Operating parameters not maintained	
Metal bellows of the coupling broken	Operating parameters do not meet the requirements	Please consult our Customer Service Department.
	Operating errors of the plant unit	

Tbl-11: Malfunctions

9 Appendix

9.1 Specifications on mounting onto a motor

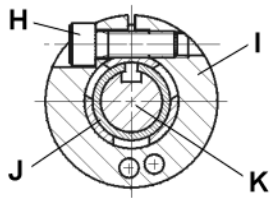

	Designation
H	Clamping bolt
I	Clamping ring (part of the clamping hub)
J	Bushing
K	Shaft

Tbl-12: Arrangement of motor shaft, clamping hub, and bushing

Gearhead size SK+		Clamping hub interior Ø "x" [mm]	Clamping bolt (H)/ property class DIN ISO 4762	Width across flats [mm]	Tightening torque [Nm]	max. axial force clamping hub [N]	
						Plug-in terminal	Coupling
060	1–stage	x ≤ 14 14 < x ≤ 19	M5 / 10.9 M6 / 10.9	4 5	8,5 14	—	10
	2–stage	x ≤ 11 11 < x ≤ 14	M4 / 12.9 M5 / 12.9	3 4	4,1 9,5	80	—
075	1–stage	x ≤ 19 19 < x ≤ 28	M6 / 10.9 M8 / 10.9	5 6	14 35	—	20
	2–stage	x ≤ 14 14 < x ≤ 19	M5 / 12.9 M6 / 12.9	4 5	9,5 14	100	—
100	1–stage	x ≤ 28 28 < x ≤ 38	M8 / 10.9 M10 / 10.9	6 8	35 69	—	30
	2–stage	x ≤ 19 19 < x ≤ 28	M6 / 12.9 M8 / 12.9	5 6	14 35	120	—
140	1–stage	x ≤ 38	M10 / 10.9	8	69	—	50
	2–stage	x ≤ 24 24 < x ≤ 38	M8 / 12.9 M10 / 12.9	6 8	35 79	150	—
180	1–stage	x ≤ 48	M12 / 10.9	10	86	—	200
	2–stage	x ≤ 38 38 < x ≤ 48	M10 / 12.9 M12 / 12.9	8 10	79 135	200	—

Tbl-13: Specifications on mounting onto a motor

9.2 Specifications on mounting onto a machine

Gearhead size SK+	Hole circle Ø [mm]	Bore Ø [mm]	Screw size / property class	Tightening torque [Nm]
060	68	5,5	M5 / 12.9	9
075	85	6,6	M6 / 12.9	15,4
100	120	9,0	M8 / 12.9	37,3
140	165	11,0	M10 / 12.9	73,4
180	215	13,5	M12 / 12.9	126

Tbl-14: Specifications on mounting onto a machine

9.3 Tightening torques for common thread sizes in general mechanics

The specified tightening torques for headless screws and nuts are calculated values and are based on the following conditions:

- Calculation acc. VDI 2230 (Issue February 2003)
- Friction value for thread and contact surfaces μ=0.10
- Exploitation of the yield stress 90 %

	Tightening torque [Nm] for threads												
Property class Bolt / nut	**M3**	**M4**	**M5**	**M6**	**M8**	**M10**	**M12**	**M14**	**M16**	**M18**	**M20**	**M22**	**M24**
8.8 / 8	1.15	2.64	5.24	8.99	21.7	42.7	73.5	118	180	258	363	493	625
10.9 / 10	1.68	3.88	7.69	13.2	31.9	62.7	108	173	265	368	516	702	890
12.9 / 12	1.97	4.55	9.00	15.4	37.3	73.4	126	203	310	431	604	821	1042

Tbl-15: Tightening torques for headless screws and nuts

9.4 Technical specifications

9.4.1 Technical specifications for SK+ 060 for use in areas with explosion hazards

Technical specifications for SK+ 060, 1-stage						
Ratio		**3**	**4**	**5**	**7**	**10**
Max. acceleration torque T_{2B} (max. 1000 cycles per hour)	**Nm**	24	24	24	20	16
	in.lb	212	212	212	177	142
Nominal torque at gear output T_{2N} (At n_{1N})	**Nm**	17.5	17.5	17.5	16	12
	in.lb	155	155	155	142	106
Emergency-stop torque T_{2Not} (1000 times possible during the lifespan of the gearhead)	**Nm**	40	40	40	40	40
	in.lb	354	354	354	354	354
Permissible medium drive speed in n_{1N} (At T_{2N})	**rpm**	2000	2100	2400	2400	2400
Max. continuous speed n_{1Ncym} (At 20% T_{2N})	**rpm**	2200	2600	3000	2700	2700
Max. drive speed n_{1Max}	**rpm**	6000	6000	6000	6000	6000
Average no-load running torque $T_{012;}$ (At n_1=3000 rpm and 20°C gearhead temperature) [a]	**Nm**	1.2	1.1	1	1.2	1.1
	in.lb	10.6	9.7	8.9	10.6	9.7
Max. torsional backlash j_t	**arcmin**	< 5				
Torsional rigidity C_{t12}	**Nm/arcmin**	2.0	2.1	2.2	2.0	1.8
	in.lb/arcmin	18	19	19	18	16
Max. axial force F_{2AMax} [b]	**N**	1650				
	lbf	371				
Max. radial force F_{2RMax} [b]	**N**	1850				
	lbf	416				
Max. tilting moment M_{2KMax}	**Nm**	175				
	in.lb	1549				
Life L_h Calculation see "Technical Basics"	**h**	See chapter 7.1.4 "Replacing the gearhead"				
Weight incl. standard adapter plate m	**kg**	2.9				
	lbm	6.4				
Noise level L_{PA} (At n_1=3000 rpm w/o load)	**dB(A)**	< 64				
Max. permissible housing temperature	**°C**	90				
	F	194				
Ambient temperature	**°C**	0 to +40				
	F	32 to 104				
Paint		Blue RAL 5002				
Direction of rotation		Drive and gear output counter-directional				
Protection class		IP 65				

Technical specifications for SK+ 060, 1-stage						
Ratio		**3**	**4**	**5**	**7**	**10**
Mass moment of inertia J_1 referring to the drive; Bore diameters of the clamping hub: 14 mm	**kgcm²**	0.52	0.44	0.40	0.36	0.34
	10^{-3} in.lb.s²	0.46	0.39	0.35	0.32	0.30
Mass moment of inertia J_1 referring to the drive; Bore diameters of the clamping hub: 19 mm	**kgcm²**	0.87	0.79	0.75	0.71	0.70
	10^{-3} in.lb.s²	0.77	0.70	0.66	0.63	0.62
[a] No-load running torques diminish during operation [b] Based on the shaft or flange center at the gear output						

Tbl-16: SK+ 060, 1-stage: Technical specifications for use in areas with explosion hazards

Technical specifications for SK+ 060, 2-stage											
Ratio		**12**	**16**	**20**	**25**	**28**	**35**	**40**	**50**	**70**	**100**
Max. acceleration torque T_{2B} (max. 1000 cycles per hour)	**Nm**	24	24	24	24	24	24	24	24	20	16
	in.lb	212	212	212	212	212	212	212	212	177	142
Nominal torque at gear output T_{2N} (At n_{1N})	**Nm**	17.5	17.5	17.5	17.5	17.5	17.5	17.5	17.5	16	12
	in.lb	155	155	155	155	155	155	155	155	142	106
Emergency-stop torque T_{2Not} (1000 times possible during the lifespan of the gearhead)	**Nm**	40	40	40	40	40	40	40	40	40	40
	in.lb	354	354	354	354	354	354	354	354	354	354
Permissible medium drive speed in n_{1N} (At T_{2N})	**rpm**	3500	3500	3500	3500	3500	3500	3500	3800	4400	4400
Max. continuous speed n_{1Ncym} (At 20% T_{2N})	**rpm**	4000	4000	4000	4000	4000	4000	4000	4000	4400	4400
Max. drive speed n_{1Max}	**rpm**	6000	6000	6000	6000	6000	6000	6000	6000	6000	6000
Average no-load running torque $T_{012;}$ (At n_1=3000 rpm and 20°C gearhead temperature) [a]	**Nm**	0.2	0.2	0.2	0.2	0.2	0.2	0.1	0.1	0.1	0.1
	in.lb	1.8	1.8	1.8	1.8	1.8	1.8	0.9	0.9	0.9	0.9
Max. torsional backlash j_t	**arcmin**	≤ 5									
Torsional rigidity C_{t12}	**Nm/ arcmin**	2.1	2.1	2.1	2.1	2.1	2.1	2.1	2.2	2	1.8
	in.lb/ arcmin	19	19	19	19	19	19	19	19	18	16
Max. axial force F_{2AMax} [b]	**N**	1650									
	lbf	371									
Max. radial force F_{2RMax} [b]	**N**	1850									
	lbf	416									
Max. tilting moment M_{2KMax}	**Nm**	175									
	in.lb	1549									
Life $L_{h;}$ Calculation see "Technical Basics"	**h**	See chapter 7.1.4 "Replacing the gearhead"									

Technical specifications for SK+ 060, 2-stage											
Ratio		**12**	**16**	**20**	**25**	**28**	**35**	**40**	**50**	**70**	**100**
Weight incl. standard adapter plate m	**kg**	3.2									
	lbm	7.1									
Noise level L_{PA} (At n_1=3000 rpm w/o load)	**dB(A)**	≤ 64									
Max. permissible housing temperature	**°C**	+90									
	F	194									
Ambient temperature	**°C**	0 to +40									
	F	32 to 104									
Paint		Blue RAL 5002									
Direction of rotation		Drive and gear output counter-directional									
Protection class		IP 65									
Mass moment of inertia J_1 referring to the drive; Bore diameters of the clamping hub: 11 mm	**$kgcm^2$**	0.09	0.09	0.07	0.07	0.06	0.06	0.06	0.06	0.06	0.06
	10^{-3} in.lb.s^2	0.08	0.08	0.07	0.06	0.06	0.06	0.05	0.05	0.05	0.05
Mass moment of inertia J_1 referring to the drive; Bore diameters of the clamping hub: 14 mm	**$kgcm^2$**	0.20	0.20	0.19	0.19	0.18	0.18	0.17	0.17	0.17	0.17
	10^{-3} in.lb.s^2	0.18	0.18	0.17	0.16	0.16	0.16	0.15	0.15	0.15	0.15
[a] No-load running torques diminish during operation [b] Based on the shaft or flange center at the gear output											

Tbl-17: SK+ 060, 2-stage: Technical specifications for use in areas with explosion hazards

9.4.2 Technical specifications for SK+ 075 for use in areas with explosion hazards

Technical specifications for SK+ 075, 1-stage						
Ratio		**3**	**4**	**5**	**7**	**10**
Max. acceleration torque T_{2B} (max. 1000 cycles per hour)	**Nm**	70	70	70	60	50
	in.lb	620	620	620	531	443
Nominal torque at gear output T_{2N} (At n_{1N})	**Nm**	50	50	50	45	40
	in.lb	443	443	443	398	354
Emergency-stop torque T_{2Not} (1000 times possible during the lifespan of the gearhead)	**Nm**	95	95	95	95	95
	in.lb	841	841	841	841	841
Permissible medium drive speed in n_{1N} (At T_{2N})	**rpm**	2300	2500	2800	2800	2800
Max. continuous speed n_{1Ncym} (At 20% T_{2N})	**rpm**	3000	3500	4000	3500	3500
Max. drive speed n_{1Max}	**rpm**	6000	6000	6000	6000	6000
Average no-load running torque T_{012} (At n_1=3000 rpm and 20°C gearhead temperature) [a]	**Nm**	2.0	1.7	1.5	2.0	1.8
	in.lb	18	15	13	18	16
Max. torsional backlash j_t	**arcmin**	≤ 4				
Torsional rigidity C_{t12}	**Nm/arcmin**	5.0	5.5	6.0	6.0	6.0
	in.lb/arcmin	44	49	53	53	53

Technical specifications for SK+ 075, 1-stage						
Ratio		**3**	**4**	**5**	**7**	**10**
Max. axial force F_{2AMax} [b]	**N**	2350				
	lbf	528				
Max. radial force F_{2RMax} [b]	**N**	2800				
	lbf	630				
Max. tilting moment M_{2KMax}	**Nm**	300				
	in.lb	2655				
Life L_h Calculation see "Technical Basics"	**h**	See chapter 7.1.4 "Replacing the gearhead"				
Weight incl. standard adapter plate m	**kg**	4.8				
	lbm	10.6				
Noise level L_{PA} (At n_1=3000 rpm w/o load)	**dB(A)**	≤ 66				
Max. permissible housing temperature	**°C**	+90				
	F	194				
Ambient temperature	**°C**	0 to +40				
	F	32 to 104				
Paint		Blue RAL 5002				
Direction of rotation		Drive and gear output counter-directional				
Protection class		IP 65				
Mass moment of inertia J_1 referring to the drive; Bore diameters of the clamping hub: 19 mm	**$kgcm^2$**	1.46	1.19	1.06	0.95	0.90
	10^{-3} in.lb.s^2	1.29	1.05	0.94	0.84	0.79
Mass moment of inertia J_1 referring to the drive; Bore diameters of the clamping hub: 28 mm	**$kgcm^2$**	2.88	2.61	2.47	2.37	2.31
	10^{-3} in.lb.s^2	2.55	2.31	2.19	2.10	2.04
[a] No-load running torques diminish during operation [b] Based on the shaft or flange center at the gear output						

Tbl-18: SK+ 075, 1-stage: Technical specifications for use in areas with explosion hazards

Technical specifications for SK+ 075, 2-stage											
Ratio		**12**	**16**	**20**	**25**	**28**	**35**	**40**	**50**	**70**	**100**
Max. acceleration torque T_{2B} (max. 1000 cycles per hour)	**Nm**	70	70	70	70	70	70	70	70	60	50
	in.lb	620	620	620	620	620	620	620	620	531	443
Nominal torque at gear output T_{2N} (At n_{1N})	**Nm**	50	50	50	50	50	50	50	50	45	40
	in.lb	443	443	443	443	443	443	443	443	398	354
Emergency-stop torque T_{2Not} (1000 times possible during the lifespan of the gearhead)	**Nm**	95	95	95	95	95	95	95	95	95	95
	in.lb	841	841	841	841	841	841	841	841	841	841
Permissible medium drive speed in n_{1N} (At T_{2N})	**rpm**	3500	3500	3500	3500	3500	3500	3500	3800	4500	4500

Technical specifications for SK+ 075, 2-stage											
Ratio		**12**	**16**	**20**	**25**	**28**	**35**	**40**	**50**	**70**	**100**
Max. continuous speed n_{1Ncym} (At 20% T_{2N})	**rpm**	4500	4500	4500	4500	4500	4500	4500	4500	4500	4500
Max. drive speed n_{1Max}	**rpm**	6000	6000	6000	6000	6000	6000	6000	6000	6000	6000
Average no-load running torque T_{012} (At n_1=3000 rpm and 20°C gearhead temperature) [a]	**Nm**	0.3	0.3	0.2	0.2	0.2	0.2	0.1	0.1	0.1	0.1
	in.lb	2.7	2.7	1.8	1.8	1.8	1.8	0.9	0.9	0.9	0.9
Max. torsional backlash j_t	**arcmin**	≤ 4									
Torsional rigidity C_{t12}	**Nm/ arcmin**	5.5	5.5	5.5	5.5	5.5	5.5	5.5	6.0	6.0	6.0
	in.lb/ arcmin	49	49	49	49	49	49	49	53	53	53
Max. axial force F_{2AMax} [b]	**N**	2350									
	lbf	529									
Max. radial force F_{2RMax} [b]	**N**	2800									
	lbf	630									
Max. tilting moment M_{2KMax}	**Nm**	300									
	in.lb	2655									
Life L_h; Calculation see "Technical Basics"	**h**	See chapter 7.1.4 "Replacing the gearhead"									
Weight incl. standard adapter plate m	**kg**	5.4									
	lbm	11.9									
Noise level L_{PA} (At n_1=3000 rpm w/o load)	**dB(A)**	≤ 66									
Max. permissible housing temperature	**°C**	+90									
	F	194									
Ambient temperature	**°C**	0 to +40									
	F	32 to 104									
Paint		Blue RAL 5002									
Direction of rotation		Drive and gear output counter-directional									
Protection class		IP 65									
Mass moment of inertia J_1 ; referring to the drive; Bore diameters of the clamping hub: 14 mm	**$kgcm^2$**	0.28	0.27	0.23	0.23	0.20	0.20	0.18	0.18	0.18	0.18
	10^{-3} in.lb.s^2	0.25	0.24	0.21	0.20	0.18	0.18	0.16	0.16	0.16	0.16
Mass moment of inertia J_1 ; referring to the drive; Bore diameters of the clamping hub: 19 mm	**$kgcm^2$**	0.73	0.71	0.68	0.67	0.63	0.62	0.63	0.63	0.63	0.63
	10^{-3} in.lb.s^2	0.64	0.63	0.60	0.59	0.55	0.55	0.56	0.55	0.55	0.55
[a] No-load running torques diminish during operation [b] Based on the shaft or flange center at the gear output											

Tbl-19: SK+ 075, 2-stage: Technical specifications for use in areas with explosion hazards

9.4.3 Technical specifications for SK+ 100 for use in areas with explosion hazards

Technical specifications for SK+ 100, 1-stage						
Ratio		**3**	**4**	**5**	**7**	**10**
Max. acceleration torque T_{2B} (max. 1000 cycles per hour)	**Nm**	125	125	125	95	85
	in.lb	1106	1106	1106	841	752
Nominal torque at gear output T_{2N} (At n_{1N})	**Nm**	75	75	75	60	55
	in.lb	664	664	664	531	487
Emergency-stop torque T_{2Not} (1000 times possible during the lifespan of the gearhead)	**Nm**	200	200	200	200	200
	in.lb	1770	1770	1770	1770	1770
Permissible medium drive speed in n_{1N} (At T_{2N})	**rpm**	1500	1500	1800	1600	1600
Max. continuous speed n_{1Ncym} (At 20% T_{2N})	**rpm**	2400	2400	2400	1800	1800
Max. drive speed n_{1Max}	**rpm**	4500	4500	4500	4500	4500
Average no-load running torque T_{012} ; (At n_1=3000 rpm and 20°C gearhead temperature) [a]	**Nm**	3.8	3.0	2.3	3.5	2.8
	in.lb	34	27	20	31	25
Max. torsional backlash j_t	**arcmin**	≤ 4				
Torsional rigidity C_{t12}	**Nm/arcmin**	10	11	13	13	13
	in.lb/arcmin	89	97	115	115	115
Max. axial force F_{2AMax} [b]	**N**	3950				
	lbf	889				
Max. radial force F_{2RMax} [b]	**N**	2800				
	lbf	630				
Max. tilting moment M_{2KMax}	**Nm**	580				
	in.lb	5133				
Life L_h Calculation see "Technical Basics"	**h**	See chapter 7.1.4 "Replacing the gearhead"				
Weight incl. standard adapter plate m	**kg**	9.3				
	lbm	21				
Noise level L_{PA} (At n_1=3000 rpm w/o load)	**dB(A)**	≤ 66				
Max. permissible housing temperature	**°C**	+90				
	F	194				
Ambient temperature	**°C**	0 to +40				
	F	32 to 104				
Paint		Blue RAL 5002				
Direction of rotation		Drive and gear output counter-directional				
Protection class		IP 65				

Technical specifications for SK+ 100, 1-stage						
Ratio		**3**	**4**	**5**	**7**	**10**
Mass moment of inertia J_1 referring to the drive; Bore diameters of the clamping hub: 28 mm	**$kgcm^2$**	4.64	3.80	3.34	2.98	2.79
	10^{-3} in.lb.s^2	4.10	3.36	2.95	2.64	2.47
Mass moment of inertia J_1 referring to the drive; Bore diameters of the clamping hub: 38 mm	**$kgcm^2$**	11.9	11.0	10.6	10.2	10.0
	10^{-3} in.lb.s^2	10.5	9.8	9.4	9.1	8.9
[a] No-load running torques diminish during operation [b] Based on the shaft or flange center at the gear output						

Tbl-20: SK+ 100, 1-stage: Technical specifications for use in areas with explosion hazards

Technical specifications for SK+ 100, 2-stage											
Ratio		**12**	**16**	**20**	**25**	**28**	**35**	**40**	**50**	**70**	**100**
Max. acceleration torque T_{2B} (max. 1000 cycles per hour)	**Nm**	125	125	125	125	125	125	125	125	95	85
	in.lb	1106	1106	1106	1106	1106	1106	1106	1106	841	752
Nominal torque at gear output T_{2N} (At n_{1N})	**Nm**	75	75	75	75	75	75	75	75	60	55
	in.lb	664	664	664	664	664	664	664	664	531	487
Emergency-stop torque T_{2Not} (1000 times possible during the lifespan of the gearhead)	**Nm**	200	200	200	200	200	200	200	200	200	200
	in.lb	1770	1770	1770	1770	1770	1770	1770	1770	1770	1770
Permissible medium drive speed in n_{1N} (At T_{2N})	**rpm**	3100	3100	3100	3100	3100	3100	3100	3500	4200	4200
Max. continuous speed n_{1Ncym} (At 20% T_{2N})	**rpm**	4000	4000	4000	4000	4000	4000	4000	4000	4200	4200
Max. drive speed n_{1Max}	**rpm**	4500	4500	4500	4500	4500	4500	4500	4500	4500	4500
Average no-load running torque T_{012} (At n_1=3000 rpm and 20°C gearhead temperature) [a]	**Nm**	0.6	0.6	0.5	0.4	0.4	0.3	0.2	0.2	0.2	0.2
	in.lb	5.3	5.3	4.4	3.5	3.5	2.7	1.8	1.8	1.8	1.8
Max. torsional backlash j_t	**arcmin**	≤ 4									
Torsional rigidity C_{t12}	**Nm/ arcmin**	11	11	11	11	11	11	11	13	13	13
	in.lb/ arcmin	97	97	97	97	97	97	97	115	115	115
Max. axial force F_{2AMax} [b]	**N**	3950									
	lbf	889									
Max. radial force F_{2RMax} [b]	**N**	2800									
	lbf	630									
Max. tilting moment M_{2KMax}	**Nm**	580									
	in.lb	5133									
Life L_h Calculation see "Technical Basics"	**h**	See chapter 7.1.4 "Replacing the gearhead"									

Technical specifications for SK+ 100, 2-stage											
Ratio		**12**	**16**	**20**	**25**	**28**	**35**	**40**	**50**	**70**	**100**
Weight incl. standard adapter plate m	**kg**	10									
	lbm	22									
Noise level L_{PA} (At n_1=3000 rpm w/o load)	**dB(A)**	≤ 66									
Max. permissible housing temperature	**°C**	+90									
	F	194									
Ambient temperature	**°C**	0 to +40									
	F	32 to 104									
Paint		Blue RAL 5002									
Direction of rotation		Drive and gear output counter-directional									
Protection class		IP 65									
Mass moment of inertia J_1; referring to the drive; Bore diameters of the clamping hub: 19 mm	**$kgcm^2$**	1.02	0.97	0.86	0.84	0.75	0.74	0.69	0.69	0.68	0.68
	10^{-3} $in.lb.s^2$	0.91	0.86	0.76	0.74	0.66	0.66	0.61	0.61	0.60	0.60
Mass moment of inertia J_1; referring to the drive; Bore diameters of the clamping hub: 24 mm	**$kgcm^2$**	2.59	2.54	2.42	2.40	2.31	2.30	2.26	2.25	2.25	2.25
	10^{-3} $in.lb.s^2$	2.29	2.25	2.14	2.13	2.05	2.04	2.00	1.99	1.99	1.99
[a] No-load running torques diminish during operation [b] Based on the shaft or flange center at the gear output											

Tbl-21: SK+ 100, 2-stage: Technical specifications for use in areas with explosion hazards

9.4.4 Technical specifications for SK+ 140 for use in areas with explosion hazards

Technical specifications for SK+ 140, 1-stage						
Ratio		**3**	**4**	**5**	**7**	**10**
Max. acceleration torque T_{2B} (max. 1000 cycles per hour)	**Nm**	190	190	205	185	170
	in.lb	1682	1682	1814	1637	1505
Nominal torque at gear output T_{2N} (At n_{1N})	**Nm**	120	120	130	130	130
	in.lb	1062	1062	1151	1151	1151
Emergency-stop torque T_{2Not} (1000 times possible during the lifespan of the gearhead)	**Nm**	400	420	420	420	400
	in.lb	3540	3717	3717	3717	3540
Permissible medium drive speed in n_{1N} (At T_{2N})	**rpm**	1300	1300	1500	1400	1500
Max. continuous speed n_{1Ncym} (At 20% T_{2N})	**rpm**	1700	1800	2000	1800	2000
Max. drive speed n_{1Max}	**rpm**	3500	4500	4500	4500	4500
Average no-load running torque T_{012} (At n_1=3000 rpm and 20°C gearhead temperature) [a]	**Nm**	7	5.2	4.5	7.5	5.5
	in.lb	62	46	40	66	49
Max. torsional backlash j_t	**arcmin**	≤ 4				
Torsional rigidity C_{t12}	**Nm/arcmin**	27	30	32	32	32
	in.lb/arcmin	239	266	283	283	283

Technical specifications for SK+ 140, 1-stage						
Ratio		**3**	**4**	**5**	**7**	**10**
Max. axial force F_{2AMax} [b]	**N**	6900				
	lbf	1553				
Max. radial force F_{2RMax} [b]	**N**	6600				
	lbf	1485				
Max. tilting moment M_{2KMax}	**Nm**	1180				
	in.lb	10443				
Life L_h Calculation see "Technical Basics"	**h**	See chapter 7.1.4 "Replacing the gearhead"				
Weight incl. standard adapter plate m	**kg**	22.6				
	lbm	50				
Noise level L_{PA} (At n_1=3000 rpm w/o load)	**dB(A)**	≤ 68				
Max. permissible housing temperature	**°C**	+90				
	F	194				
Ambient temperature	**°C**	0 to +40				
	F	32 to 104				
Paint		Blue RAL 5002				
Direction of rotation		Drive and gear output counter-directional				
Protection class		IP 65				
Mass moment of inertia J_1 referring to the drive; Bore diameters of the clamping hub: 38 mm	**$kgcm^2$**	25.0	19.1	16.3	14.1	12.8
	10^{-3} in.lb.s^2	22.1	16.9	14.4	12.4	11.3
[a] No-load running torques diminish during operation [b] Based on the shaft or flange center at the gear output						

Tbl-22: SK+ 140, 1-stage: Technical specifications for use in areas with explosion hazards

Technical specifications for SK+ 140, 2-stage											
Ratio		**12**	**16**	**20**	**25**	**28**	**35**	**40**	**50**	**70**	**100**
Max. acceleration torque T_{2B} (max. 1000 cycles per hour)	**Nm**	190	190	190	205	190	205	190	205	185	170
	in.lb	1682	1682	1682	1814	1682	1814	1682	1814	1637	1505
Nominal torque at gear output T_{2N} (At n_{1N})	**Nm**	120	120	120	120	120	120	120	130	130	130
	in.lb	1062	1062	1062	1062	1062	1062	1062	1151	1151	1151
Emergency-stop torque T_{2Not} (1000 times possible during the lifespan of the gearhead)	**Nm**	400	420	420	420	420	420	420	420	420	400
	in.lb	3540	3717	3717	3717	3717	3717	3717	3717	3717	3540
Permissible medium drive speed in n_{1N} (At T_{2N})	**rpm**	2900	2900	2900	2900	2900	2900	2900	3200	3200	3900
Max. continuous speed n_{1Ncym} (At 20% T_{2N})	**rpm**	4000	4000	4000	4000	4000	4000	4000	4200	4200	4200
Max. drive speed n_{1Max}	**rpm**	4500	4500	4500	4500	4500	4500	4500	4500	4500	4500

Technical specifications for SK+ 140, 2-stage											
Ratio		**12**	**16**	**20**	**25**	**28**	**35**	**40**	**50**	**70**	**100**
Average no-load running torque T_{012} (At n_1=3000 rpm and 20°C gearhead temperature) [a]	**Nm**	1.4	0.9	0.7	0.5	0.5	0.4	0.4	0.3	0.3	0.3
	in.lb	12.4	8.0	6.2	4.4	4.4	3.5	3.5	2.7	2.7	2.7
Max. torsional backlash j_t	**arcmin**	≤ 4									
Torsional rigidity C_{t12}	**Nm/ arcmin**	29	29	29	29	29	29	29	31	31	31
	in.lb/ arcmin	257	257	257	257	257	257	257	274	274	274
Max. axial force F_{2AMax} [b]	**N**	6900									
	lbf	1553									
Max. radial force F_{2RMax} [b]	**N**	6600									
	lbf	1485									
Max. tilting moment M_{2KMax}	**Nm**	1180									
	in.lb	10443									
Life L_h Calculation see "Technical Basics"	**h**	See chapter 7.1.4 "Replacing the gearhead"									
Weight incl. standard adapter plate m	**kg**	25									
	lbm	55									
Noise level L_{PA} (At n_1=3000 rpm w/o load)	**dB(A)**	≤ 68									
Max. permissible housing temperature	**°C**	+90									
	F	194									
Ambient temperature	**°C**	0 to +40									
	F	32 to 104									
Paint		Blue RAL 5002									
Direction of rotation		Drive and gear output counter-directional									
Protection class		IP 65									
Mass moment of inertia J_1 referring to the drive; Bore diameters of the clamping hub: 24 mm	**$kgcm^2$**	4.21	3.85	3.28	3.17	2.78	2.73	2.48	2.46	2.43	2.42
	10^{-3} $in.lb.s^2$	3.73	3.41	2.90	2.80	2.46	2.41	2.20	2.17	2.15	2.14
Mass moment of inertia J_1 referring to the drive; Bore diameters of the clamping hub: 38 mm	**$kgcm^2$**	11.1	10.7	10.2	10.1	9.69	9.64	9.39	9.37	9.3	9.3
	10^{-3} $in.lb.s^2$	9.85	9.52	9.02	8.92	8.58	8.53	8.31	8.29	8.27	8.26

[a] No-load running torques diminish during operation
[b] Based on the shaft or flange center at the gear output

Tbl-23: SK+ 140, 2-stage: Technical specifications for use in areas with explosion hazards

9.4.5 Technical specifications for SK+ 180 for use in areas with explosion hazards

Technical specifications for SK+ 180, 1-stage						
Ratio		**3**	**4**	**5**	**7**	**10**
Max. acceleration torque T_{2B} (max. 1000 cycles per hour)	**Nm**	400	400	400	350	300
	in.lb	3540	3540	3540	3098	2655
Nominal torque at gear output T_{2N} (At n_{1N})	**Nm**	250	250	250	230	220
	in.lb	2213	2213	2213	2036	1947
Emergency-stop torque T_{2Not} (1000 times possible during the lifespan of the gearhead)	**Nm**	900	900	900	900	900
	in.lb	7965	7965	7965	7965	7965
Permissible medium drive speed in n_{1N} (At T_{2N})	**rpm**	1000	1200	1300	1200	1200
Max. continuous speed n_{1Ncym} (At 20% T_{2N})	**rpm**	1200	1500	1700	1500	1500
Max. drive speed n_{1Max}	**rpm**	2700	3200	3800	3800	3800
Average no-load running torque T_{012} ; (At n_1=3000 rpm and 20°C gearhead temperature) [a]	**Nm**	14.5	12	10	15	12.5
	in.lb	128	106	89	133	111
Max. torsional backlash j_t	**arcmin**	≤ 4				
Torsional rigidity C_{t12}	**Nm/arcmin**	64	71	79	78	77
	in.lb/arcmin	566	628	699	690	681
Max. axial force F_{2AMax} [b]	**N**	9900				
	lbf	2228				
Max. radial force F_{2RMax} [b]	**N**	10250				
	lbf	2306				
Max. tilting moment M_{2KMax}	**Nm**	2250				
	in.lb	19913				
Life L_h Calculation see "Technical Basics"	**h**	See chapter 7.1.4 "Replacing the gearhead"				
Weight incl. standard adapter plate m	**kg**	45.4				
	lbm	100				
Noise level L_{PA} (At n_1=3000 rpm w/o load)	**dB(A)**	≤ 68				
Max. permissible housing temperature	**°C**	+90				
	F	194				
Ambient temperature	**°C**	0 to +40				
	F	32 to 104				
Paint		Blue RAL 5002				
Direction of rotation		Drive and gear output counter-directional				
Protection class		IP 65				
Mass moment of inertia J_1 referring to the drive; Bore diameters of the clamping hub: 48 mm	**$kgcm^2$**	73.3	51.6	42.1	34.0	29.7
	10^{-3} in.lb.s^2	64.9	45.6	37.3	30.1	26.3
[a] No-load running torques diminish during operation [b] Based on the shaft or flange center at the gear output						

Tbl-24: SK+ 180, 1-stage: Technical specifications for use in areas with explosion hazards

Technical specifications for SK+ 180, 2-stage											
Ratio		**12**	**16**	**20**	**25**	**28**	**35**	**40**	**50**	**70**	**100**
Max. acceleration torque T_{2B} (max. 1000 cycles per hour)	**Nm**	400	400	400	400	400	400	400	400	350	300
	in.lb	3540	3540	3540	3540	3540	3540	3540	3540	3098	2655
Nominal torque at gear output T_{2N} (At n_{1N})	**Nm**	250	250	250	250	250	250	250	250	230	220
	in.lb	2213	2213	2213	2213	2213	2213	2213	2213	2036	1947
Emergency-stop torque T_{2Not} (1000 times possible during the lifespan of the gearhead)	**Nm**	900	900	900	900	900	900	900	900	900	900
	in.lb	7965	7965	7965	7965	7965	7965	7965	7965	7965	7965
Permissible medium drive speed in n_{1N} (At T_{2N})	**rpm**	2150	2150	2150	2150	2150	2150	2150	2300	2550	2700
Max. continuous speed n_{1Ncym} (At 20% T_{2N})	**rpm**	2800	2800	2800	2800	2800	2800	2800	2800	3000	3000
Max. drive speed n_{1Max}	**rpm**	4000	4000	4000	4000	4000	4000	4000	4000	4000	4000
Average no-load running torque T_{012} (At n_1=3000 rpm and 20°C gearhead temperature) [a]	**Nm**	3	2.3	1.8	1.6	1.3	1.2	0.9	0.9	0.9	0.9
	in.lb	26.6	20.4	15.9	14.2	11.5	10.6	8.0	8.0	8.0	8.0
Max. torsional backlash j_t	**arcmin**	≤ 4									
Torsional rigidity C_{t12}	**Nm/ arcmin**	71	71	71	71	71	71	71	78	78	78
	in.lb/ arcmin	628	628	628	628	628	628	628	690	690	690
Max. axial force F_{2AMax} [b]	**N**	9900									
	lbf	2228									
Max. radial force F_{2RMax} [b]	**N**	10250									
	lbf	2306									
Max. tilting moment M_{2KMax}	**Nm**	2250									
	in.lb	19913									
Life L_h Calculation see "Technical Basics"	**h**	See chapter 7.1.4 "Replacing the gearhead"									
Weight incl. standard adapter plate m	**kg**	48									
	lbm	106									
Noise level L_{PA} (At n_1=3000 rpm w/o load)	**dB(A)**	≤ 68									
Max. permissible housing temperature	**°C**	+90									
	F	194									

Technical specifications for SK+ 180, 2-stage											
Ratio		**12**	**16**	**20**	**25**	**28**	**35**	**40**	**50**	**70**	**100**
Ambient temperature	**°C**	0 to +40									
	F	32 to 104									
Paint		Blue RAL 5002									
Direction of rotation		Drive and gear output counter-directional									
Protection class		IP 65									
Mass moment of inertia J_1 referring to the drive; Bore diameters of the clamping hub: 38 mm	**kgcm²**	15.3	14.0	12.3	12.0	10.9	10.7	10.1	10.0	9.95	9.91
	10^{-3} in.lb.s²	13.6	12.3	10.9	10.6	9.6	9.5	9.0	8.9	8.8	8.8
Mass moment of inertia J_1 referring to the drive; Bore diameters of the clamping hub: 48 mm	**kgcm²**	30.0	28.7	27.1	26.7	25.6	25.4	24.8	24.7	24.7	24.6
	10^{-3} in.lb.s²	26.6	25.4	23.9	23.6	22.7	22.5	22.0	21.9	21.8	21.8
[a] No-load running torques diminish during operation [b] Based on the shaft or flange center at the gear output											

Tbl-25: SK+ 180, 2-stage: Technical specifications for use in areas with explosion hazards

9.5 Lubricant quantity

Oil type: Optigear Synthetic 800 (formerly: Tribol 800)			
Gearhead size SK+	**Ratio i**	**Viscosity class ISO VG**	**Filling quantity [cm³]**
060	3, 4, 5, 16, 20, 25, 28, 35, 40, 50	100	50
	7, 10, 70, 100	220	60
075	3, 4, 5, 16, 20, 25, 28, 35, 40, 50	100	110
	7, 10, 70, 100	220	130
100	3, 4, 16, 20, 28, 40	100	170
	5, 25, 35, 50	100	190
	7, 10, 70, 100	220	210
140	3	100	270
	4, 16, 20, 28, 40	100	300
	5, 25, 35, 50	100	330
	7, 10, 70, 100	220	380
180	3	100	850
	4, 5, 16, 20, 25, 28, 35, 40, 50	100	1000
	7, 70	220	1200
	10, 100	220	1350

Tbl-26: Lubricant quantity

9.6 Declaration of Conformity

EU-Konformitätserklärung

EC-Declaration of Conformity

Wir / *We,* **WITTENSTEIN alpha GmbH**

Anschrift / *Address*
Walter-Wittenstein-Straße 1
D-97999 Igersheim
Germany
Tel: +49 (0)7931 - 493-0
Fax: +49 (0)7931 - 493-200
E-Mail: info-alpha@wittenstein.de

erklären hiermit in alleiniger Verantwortung, dass die Erzeugnisse
hereby declare under our sole responsibility that the products

Bezeichnung: **SK+/TK+/ HG+ ATEX-Hypoid-Winkelgetriebe**
Designation: ***SK+/ TK+/HG+ ATEX Hypoid right-angle gearheads***

Baugröße / *Size:* **SK+/HG+ 060, SK+/HG+ 075, SK+/HG+ 100, SK+/HG+ 140, SK+/HG+ 180**
TK+ 004, TK+ 010, TK+ 025, TK+ 050, TK+ 110

Ausführung: **MF-Version**
Version: ***MF-Version***

mit den wesentlichen Anforderungen der folgenden EN-Normen
comply with the principle demands of the following EN standards

DIN EN 13463-1:2009-07	Nicht-elektrische Geräte für den Einsatz in explosionsgefährdeten Bereichen - Teil 1: Grundlagen und Anforderungen; Deutsche Fassung EN 13463-1:2009
DIN EN 13463-1:2009-07	*Non-electrical equipment for use in potentially explosive atmospheres - Part 1: Basic method and requirements; German version EN 13463-1:2009*
DIN EN 13463-5: 2011-10	Nicht-elektrische Geräte für den Einsatz in explosionsgefährdeten Bereichen - Teil 5: Schutz durch konstruktive Sicherheit 'c'; Deutsche Fassung EN 13463-5:2011
DIN EN 13463-5:2011-10	*Non-electrical equipment intended for use in potentially explosive atmospheres - Part 5: Protection by constructional safety 'c'; German version EN 13463-5:2011*
DIN EN 13463-8:2004-01	Nicht-elektrische Geräte für den Einsatz in explosionsgefährdeten Bereichen - Teil 8: Schutz durch Flüssigkeitskapselung 'k'; Deutsche Fassung EN 13463-8:2003
DIN EN 13463-8:2004-01	*Non-electrical equipment for potentially explosive atmospheres - Part 8: Protection by liquid immersion 'k'; German version EN 13463-8:2003*

und den Prüfdokumenten übereinstimmt. Die Winkelgetriebe in der explosionsgeschützten Ausführung sind Geräte im Sinne des Artikels 1 (3) a) der EG-Richtlinie 94/9/EG (bis Produktionszeitpunkt 19.04.2016) bzw. im Sinne des Artikels 1 (1) a) der EU-Richtlinie 2014/34/EU (ab Produktionszeitpunkt 20.04.2016). Sie erfüllen die grundlegenden Sicherheits- und Gesundheitsanforderungen zur bestimmungsgemäßen Verwendung in explosionsgefährdeten Bereichen gemäß EG-Richtlinie 94/9/EG, Anhang II (bis Produktionszeitpunkt 19.04.2016) bzw. gemäß EU-Richtlinie 2014/34/EU, Anhang II (ab Produktionszeitpunkt 20.04.2016).

Document No.: 2097-D035547 Rev.: 03 page 1 of 2

WITTENSTEIN alpha

and agree with the test documents. Right-angle gearheads in highly explosive versions are devices in terms of Article 1 (3) a) of the EU directive 94/9/EC (up to the time of production 19.04.2016) respectively in terms of Article 1 (1) a) of the EU directive 2014/34/EC (from the time of production 20.04.2016) and fulfil the basic safety and health requirements for use according to regulations in explosive areas in accordance with appendix II of EU directive 94/9/EC (up to the time of production 19.04.2016) respectively with appendix II of the EU directive 2014/34/EC (from the time of production 20.04.2016).

Kennzeichnung / *Marking:*	Ex II 2G c k IIC T3 X und / *and*
	Ex II 2D c k 150 °C X
Kennzeichnung von TK+ 110 / *Marking of TK+ 110:*	Ex II 2G c k IIB T3 X und / *and*
	Ex II 2D c k 150°C X

Die explosionsgeschützten ATEX-Hypoid-Winkelgetriebe tragen das CE-Zeichen.
The explosion-proof right-angle ATEX Hypoid gearheads carry the CE symbol.

Die zugehörigen Betriebsanleitungen (WITTENSTEIN alpha-Dokumente 2022-D034857, 2022-D034858, 2022-D034859) enthalten wichtige sicherheitstechnische Hinweise und Vorschriften für Inbetriebnahme, Umgang und Wartung der SK+/TK+/HG+ - ATEX-Hypoid-Winkelgetriebe.
The accompanying manuals (WITTENSTEIN alpha documents 2022-D034857, 2022-D034858, 2022-D034859) contain important safety-related information and regulations for start-up, handling and maintenance of the SK+/TK+/HG+ ATEX Hypoid right-angle gearheads.

Das Verfahren der Konformitätsbewertung entspricht bis zum Produktionszeitpunkt 19.04.2016 der EG-Richtlinie 94/9/EG, Artikel 8 (1) b) ii). Die technischen Unterlagen (WITTENSTEIN alpha-Dokument 2098-D035459) gemäß EG-Richtlinie 94/9/EG, Anhang VIII Nummer 3 sind bei der unten benannten Stelle hinterlegt.
Ab dem Produktionszeitpunkt 20.04.2016 entspricht das Verfahren der Konformitätsbewertung der EU-Richtlinie 2014/34/EU, Artikel 13 (1) b) ii). Die technischen Unterlagen (WITTENSTEIN alpha-Dokument 2098-D035459) gemäß EG-Richtlinie 2014/34/EU, Anhang VIII Nummer 2 sind bei der unten benannten Stelle hinterlegt.

The procedure of the conformity assessment corresponds to EC Directive 94/9 / EC, Article 8 (1) b) ii) up to the time of production 04/19/2016. The technical documentation (WITTENSTEIN alpha document 2098-D035459) according to EC Directive 94/9 / EC, Annex VIII, No. 3 are deposited at the designated location below.

From the time of production 04/20/2016 the procedure of the conformity assessment corresponds to EC Directive 2014/34 / EU, Article 13 (1) b) ii). The technical documentation (WITTENSTEIN alpha document 2098-D035459) according to EC Directive 2014/34 / EU, Annex VIII, No. 2 are deposited at the designated location below.

Anschrift / *Address*
Physikalisch-Technische Bundesanstalt
Fachbereich 3.7
Bundesallee 100
D-38116 Braunschweig

Igersheim, 03.03.2016

Ort und Datum der Ausstellung *Place and Date of Issue*	i.V. Dr.-Ing. Michael Engelbreit Leiter Entwicklung- und Anwendungstechnik *Head of Engineering & Application*	i.V. Dipl.-Ing. Hartmut Kampa Leiter Qualitätsmanagement *Quality Manager*

Document No.: 2097-D035547 Rev.: 03 page 2 of 2

WITTENSTEIN alpha GmbH · Walter-Wittenstein-Straße 1 · 97999 Igersheim · Germany
Tel. +49 7931 493-12900 · info@wittenstein.de

WITTENSTEIN - one with the future

www.wittenstein-alpha.de