WITTENSTEIN | alpha

Products in corrosion-resistant and hygienic design

Hygienic
Reliable
Resistant

Reliable driving in a hygienically clean environment

Corrosion protection is vitally important for quality and maintenance optimized production – to meet the rising worldwide demand for industrial cleaning technology. Our Corrosion Resistant and EHEDG certified Hygienic Design gearboxes and stainless steel actuators allow hygienic and sterile automation close to the process.

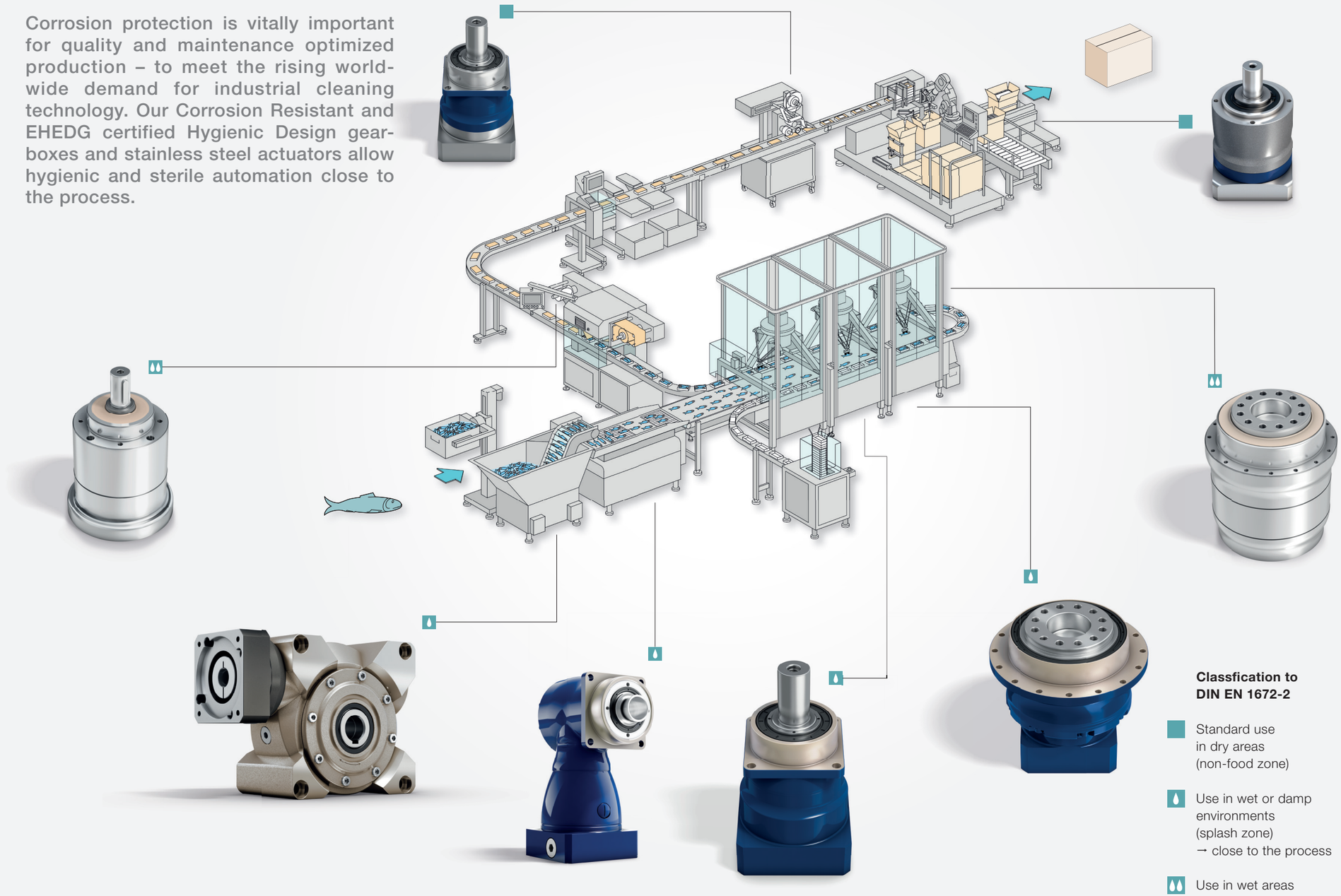

Classfication to DIN EN 1672-2

- Standard use in dry areas (non-food zone)
- Use in wet or damp environments (splash zone) → close to the process
- Use in wet areas (including high-pressure cleaning) as well as in contact with cleaning materials and chemicals (food zone) → integrated in the process

Contents

Corrosion Resistant Design

Hygienic Design

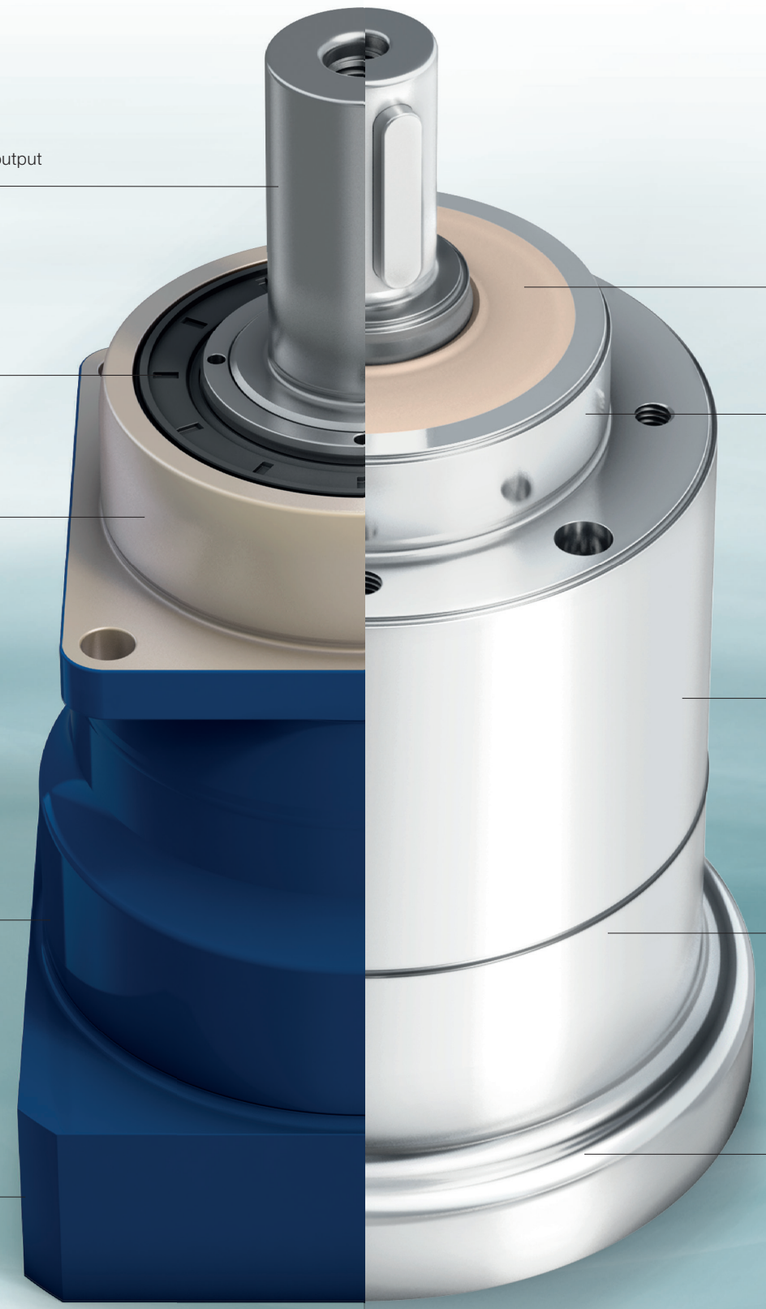

FDA

CERTIFIED
EHEDG
EUROPEAN HYGIENIC ENGINEERING & DESIGN GROUP
TYPE EL - CLASS I
MAY 2013

Corrosion Resistant Design

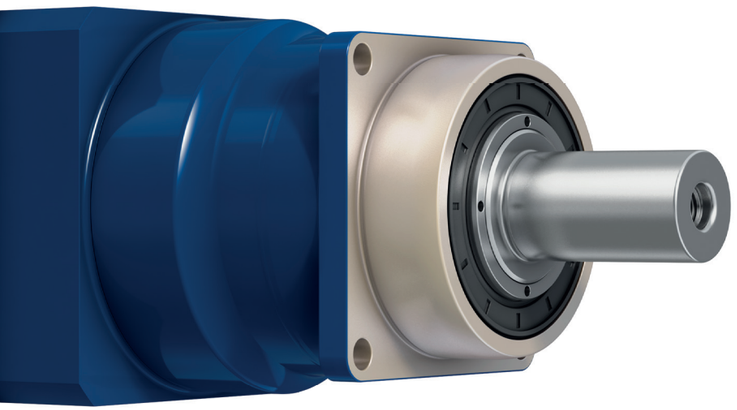

SP⁺ in corrosion resistant design

Protection against corrosion

Our drive solutions provide innovative, incomparable alternatives for applications in corrosive environments.

- Special protective coating
- Food grade lubrication (NSF certified)
- Stainless steel output
- Flexible design: Compatible with the complete product portfolio
- Optional accessories available: Stainless steel shrink discs, corrosion proof couplings

Applications:

- Environments with high humidity
- Environments where contact with food occurs
- Delta robots (e.g. with TP⁺ in corrosion resistant design)
- Solar industry
- Packaging industry
- Outdoor use

Your benefits:

- Protection against external influences (splash-proof to IP65)
- Protection against flash rust and oxidation
- Easy removal of fouling (germs, microorganisms, etc.)
- Stable processes thanks to WITTENSTEIN alpha quality

Hygienic Design

Hygienic and sterile

WITTENSTEIN alpha Hygienic Design – the world's first planetary gearbox **certified by EHEDG.** For a secure and direct process integration.

- EHEDG- and FDA-certified
- Gearbox housing in hygienic steel 1.4404
- Smooth rolled or electropolished surface
- Triple sealing concept (IP69X) (max. 30 bar)
- No dead spaces
- Food grade lubrication (NSF certified)

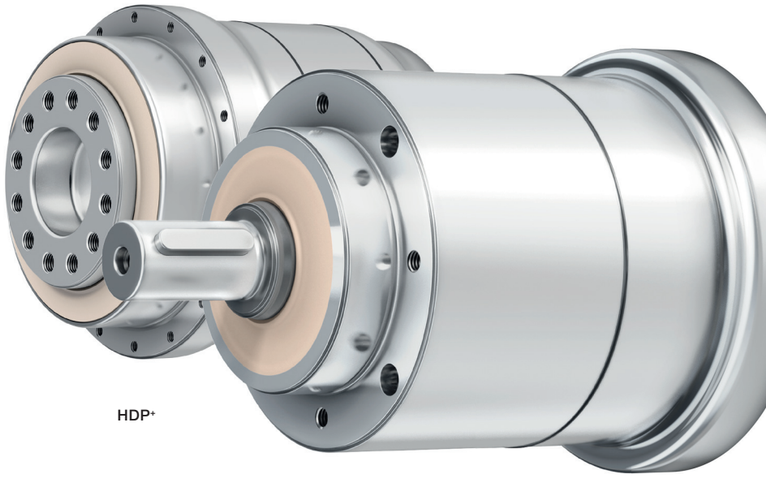

HDP⁺

HDV

Your benefits:

- Suited for hygienic and sterile production
- Direct contact with food allowed
- Fast, efficient and reliable cleaning
- Resistant to chemical cleaning materials and disinfectants (e.g. alkalis or acids such as chloride, sulphuric acid, hydrochloric acid)
- Optimal sealing properties
- Maximum resistance to corrosion
- New design freedom because the drive is integrated directly in the process
- High-pressure cleaning also possible depending on the operating environment
- Ideal for any standard motor mounting concept

Applications:

- CIP (cleaning in place) / SIP (sterilization in place)
- Delta robots
- Food industry (production, processing, packaging, filling)
- Pharmaceutical industry
- Cosmetics industry
- Process technology
- Textile industry
- Medical technology

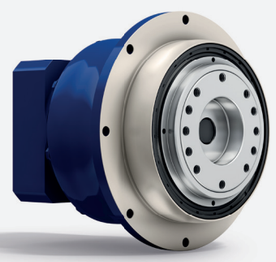

TP⁺ in corrosion resistant design

The compact precision of the TP⁺ series is ideal for applications where high dynamics are a must.

Hypoid gearbox in corrosion resistant design

Profit from our modular hypoid gearbox system with multiple variants and variable output geometries.

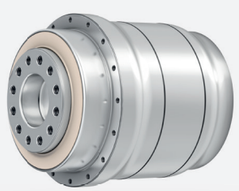

HDP⁺

Our Hygienic Design Gearboxes with an output flange represent the solution of choice for highly dynamic and compact applications (e.g. delta robots) involving direct food contact.

EHEDG certified

The principal goal of EHEDG is the promotion of safe food by improving hygienic engineering and design in all aspects of food manufacture.

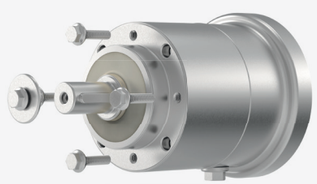

Optional mounting kit

We have developed special mounting kits for our Hygienic Design Gearboxes HDV and HDP⁺. They help to ensure a hygienic connection to the application with maximum process reliability.

Applications and benefits

Comparison of installation

Conventional solutions:
Complicated encapsulation is required to protect the drives.

- Risk of dirt and moisture build-up under the encapsulation
- Surfaces to be cleaned are large
- Extra costs (design, cleaning)
- Heat build-up under the encapsulation reduces the service life of the drive

Hygienic solution:
New design freedom thanks to the Hygienic Design motor-gearbox unit.

- Hygienic production because the drive components are cleaned directly
- Smaller surfaces save time and cleaning costs
- Open drive system extends the service life

Product benefits

- High chemical / corrosion resistance
- High IP protection for optimal sealing
- Design integration Hygienic Design (the complete plant can be designed according to HD principles)
- High power density and dynamics

Benefits for plant manufacturers

- Integration in a plant designed according to hygienic principles (certification available)
- All legal obligations fulfilled (Machinery Directive, food hygiene regulations)
- Easier production / assembly because there are fewer components
- More compact machine design
- Higher overall equipment effectiveness
- Innovative technology / competitive advantage

Benefits for operators

- Easier, faster cleaning: shorter CIP / SIP times
- Improved reliability and longer life
- Quick and easy disassembly
- Reduced consumption of cleaning materials
- Minimal costs for maintenance and repair
- Cost savings: competitive advantage and lower end user price
- Increased food safety

Application examples of food industry

Fish processing

Filling and packing dairy products

Slicing meat products

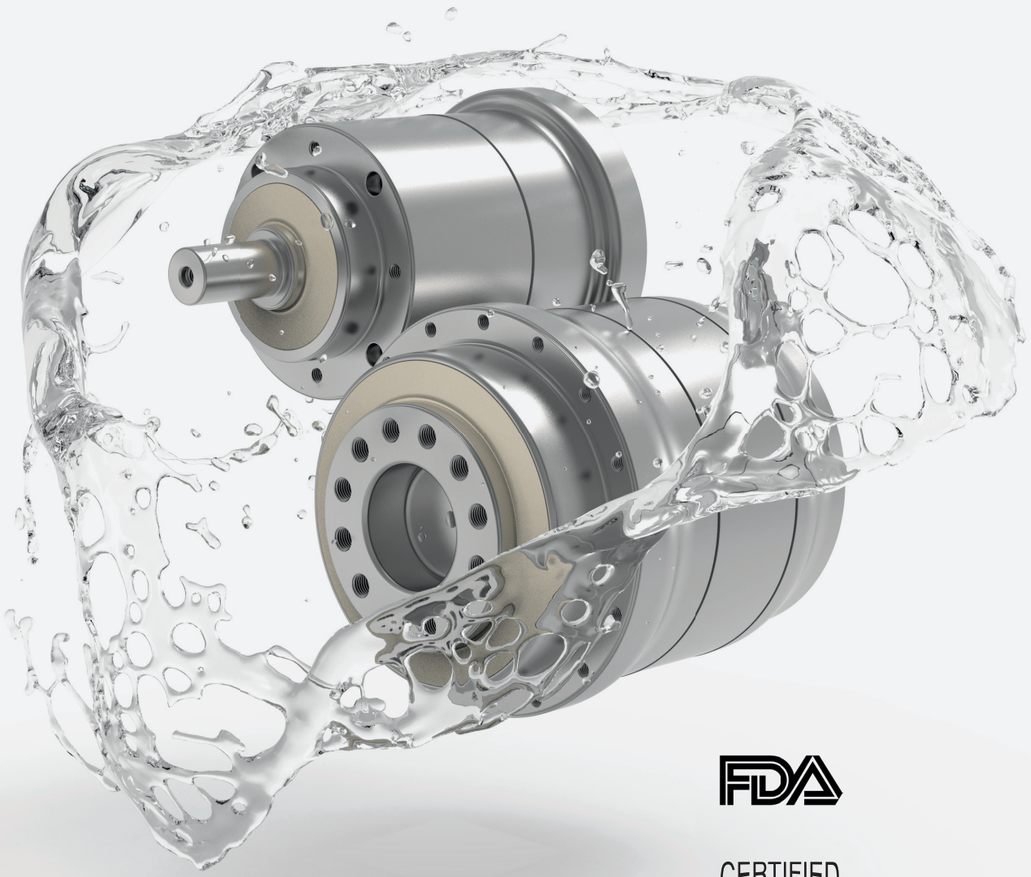

FDA

CERTIFIED EHEDG EUROPEAN HYGIENIC ENGINEERING & DESIGN GROUP
TYPE EL - CLASS I
MAY 2013

HDV 015 MF 1-/2-stage

			1-stage				2-stage						
Ratio	*i*		**4**	**5**	**7**	**10**	**16**	**20**	**25**	**35**	**50**	**70**	**100**
Max. torque [a) b) e)]	T_{2a}	*Nm*	51	51	51	46	51	51	51	51	51	51	46
		in.lb	451	451	451	407	451	451	451	451	451	451	407
Max. acceleration torque [e)] (max. 1000 cycles per hour)	T_{2B}	*Nm*	32	32	32	29	32	32	32	32	32	32	29
		in.lb	283	283	283	257	283	283	283	283	283	283	257
Emergency stop torque [a) b)] (permitted 1000 times during the service life of the gearbox)	T_{2Not}	*Nm*	75	75	75	75	75	75	75	75	75	75	75
		in.lb	664	664	664	664	664	664	664	664	664	664	664
Permitted average input speed [d)] (at T_{2a} and 20 °C ambient temperature)	n_{1N}	*rpm*	3000	3000	3000	3000	3700	3700	3700	3700	3700	3700	3700
Max. input speed	n_{1Max}	*rpm*	6000	6000	6000	6000	6000	6000	6000	6000	6000	6000	6000
Mean no load running torque [b)] (at n_1 = 3000 rpm and 20 °C gearbox temperature)	T_{012}	*Nm*	0.15	0.15	0.15	0.15	0.15	0.15	0.15	0.15	0.15	0.15	0.15
		in.lb	1.3	1.3	1.3	1.3	1.3	1.3	1.3	1.3	1.3	1.3	1.3
Max. backlash	j_t	*arcmin*	≤ 10				≤ 15						
Torsional rigidity [b)]	C_{t21}	*Nm/arcmin*	2.3	2.3	2.3	2	2.3	2.3	2.3	2.3	2.3	2.3	2
		in.lb/arcmin	20	20	20	18	20	20	20	20	20	20	18
Max. axial force [c)] (Standard / HIGH FORCES)	F_{2AMax}	*N*	500 / 1000				500 / 1000						
		lb_f	113 / 225				113 / 225						
Max. lateral force [c)] (Standard / HIGH FORCES)	F_{2QMax}	*N*	350 / 1600				350 / 1600						
		lb_f	79 / 360				79 / 360						
Max. tilting moment (Standard / HIGH FORCES)	M_{2KMax}	*Nm*	20 / 105				20 / 105						
		in.lb	177 / 929				177 / 929						
Efficiency at full load	α	%	97				95						
Service life	L_h	*h*	> 20000				> 20000						
Weight (incl. standard adapter plate)	*m*	*kg*	3.2				3.8						
		lb_m	7.1				8.4						
Operating noise (at reference ratio and reference speed – ratio-specific values available in cymex®)	L_{PA}	*dB(A)*	≤ 60				≤ 60						
Max. permitted housing temperature		*°C*	+90				+90						
		°F	+194				+194						
Ambient temperature		*°C*	–25 to +40				–25 to +40						
		°F	–13 to +104				–13 to +104						
Lubrication			Lubricated for life										
Direction of rotation			In- and output same direction										
Protection class			IP 69X										
Mass moment of inertia (relates to the drive) Clamping hub diameter [mm] C 14	J_1	*kgcm²*	0.18	0.17	0.15	0.15	0.17	0.16	0.16	0.15	0.15	0.15	0.15
		10⁻³ in.lb.s²	0.16	0.15	0.13	0.13	0.15	0.14	0.14	0.13	0.13	0.13	0.13

Please use our sizing software cymex® for a detailed sizing – **www.wittenstein-cymex.com**

Assembly accessories:
There is an optional mounting kit available for this gearbox that includes stainless steel screws, discs, seals and O-rings. For more information, see page 22.

a) Valid for torque transmission only
b) Valid for standard clamping hub diameter
c) Refers to center of the output shaft or flange
d) Please reduce input speed at higher ambient temperatures
e) Valid for: Smooth shaft

View A

View B

Motor shaft diameter [mm]

1-stage

up to 14 [4)] (C) [5)] clamping hub diameter

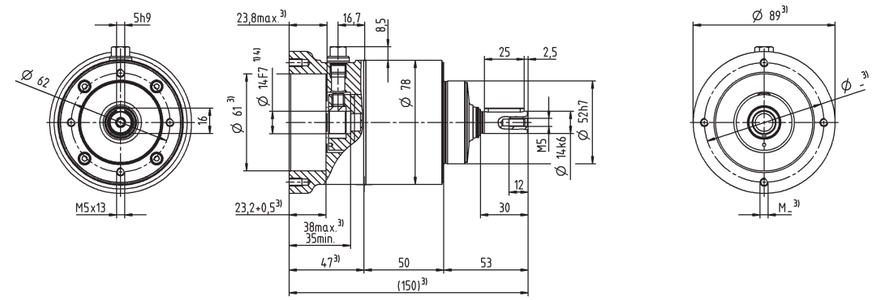

2-stage

up to 14 [4)] (C) [5)] clamping hub diameter

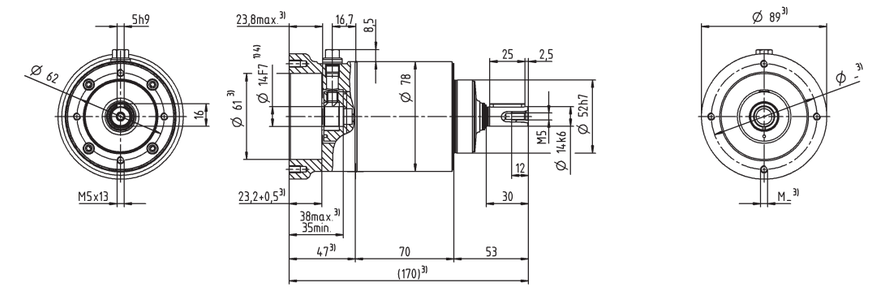

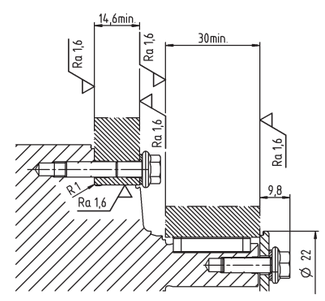

Other output variants

Smooth shaft

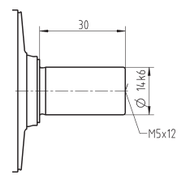

Non-tolerated dimensions are nominal dimensions
1) Check motor shaft fit
2) Min. / Max. permissible motor shaft length
Longer motor shafts are possible, please contact alpha
3) The dimensions depend on the motor
4) Smaller motor shaft diameter is compensated by a bushing with a minimum thickness of 1 mm
5) Standard clamping hub diameter

HDV 025 MF 1-/2-stage

			1-stage				2-stage						
Ratio	*i*		**4**	**5**	**7**	**10**	**16**	**20**	**25**	**35**	**50**	**70**	**100**
Max. torque [a) b) e)]	T_{2a}	*Nm*	128	128	128	115	128	128	128	128	128	128	115
		in.lb	1133	1133	1133	1018	1133	1133	1133	1133	1133	1133	1018
Max. acceleration torque [e)] (max. 1000 cycles per hour)	T_{2B}	*Nm*	80	80	80	72	80	80	80	80	80	80	72
		in.lb	708	708	708	637	708	708	708	708	708	708	637
Emergency stop torque [a) b)] (permitted 1000 times during the service life of the gearbox)	T_{2Not}	*Nm*	190	190	190	190	190	190	190	190	190	190	190
		in.lb	1682	1682	1682	1682	1682	1682	1682	1682	1682	1682	1682
Permitted average input speed [d)] (at T_{2a} and 20 °C ambient temperature)	n_{1N}	*rpm*	2700	2700	2700	2700	3400	3400	3400	3400	3400	3400	3400
Max. input speed	n_{1Max}	*rpm*	6000	6000	6000	6000	6000	6000	6000	6000	6000	6000	6000
Mean no load running torque [b)] (at n_1 = 3000 rpm and 20 °C gearbox temperature)	T_{012}	*Nm*	0.3	0.3	0.3	0.3	0.3	0.3	0.3	0.3	0.3	0.3	0.3
		in.lb	2.7	2.7	2.7	2.7	2.7	2.7	2.7	2.7	2.7	2.7	2.7
Max. backlash	j_t	*arcmin*	≤ 10				≤ 15						
Torsional rigidity [b)]	C_{t21}	*Nm/arcmin*	7.5	7.5	7.5	5.5	7.5	7.5	7.5	7.5	7.5	7.5	5.5
		in.lb/arcmin	66	66	66	49	66	66	66	66	66	66	49
Max. axial force [c)] (Standard / HIGH FORCES)	F_{2AMax}	*N*	500 / 1500				500 / 1500						
		lb_f	113 / 338				113 / 338						
Max. lateral force [c)] (Standard / HIGH FORCES)	F_{2QMax}	*N*	500 / 2500				500 / 2500						
		lb_f	113 / 563				113 / 563						
Max. tilting moment (Standard / HIGH FORCES)	M_{2KMax}	*Nm*	31 / 185				31 / 185						
		in.lb	274 / 1637				274 / 1637						
Efficiency at full load	α	%	97				95						
Service life	L_h	*h*	> 20000				> 20000						
Weight (incl. standard adapter plate)	*m*	*kg*	5.2				6.5						
		lb_m	11				14						
Operating noise (at reference ratio and reference speed – ratio-specific values available in cymex®)	L_{PA}	*dB(A)*	≤ 63				≤ 63						
Max. permitted housing temperature		°C	+90				+90						
		°F	+194				+194						
Ambient temperature		°C	–25 to +40				–25 to +40						
		°F	–13 to +104				–13 to +104						
Lubrication			Lubricated for life										
Direction of rotation			In- and output same direction										
Protection class			IP 69X										
Mass moment of inertia (relates to the drive) — Clamping hub diameter [mm]: E 19	J_1	*kgcm²*	0.63	0.54	0.52	0.46	0.6	0.52	0.54	0.5	0.52	0.52	0.46
		10^{-3} *in.lb.s²*	0.56	0.48	0.46	0.41	0.53	0.46	0.48	0.44	0.46	0.46	0.41

Please use our sizing software cymex® for a detailed sizing – **www.wittenstein-cymex.com**

Assembly accessories:
There is an optional mounting kit available for this gearbox that includes stainless steel screws, discs, seals and O-rings. For more information, see page 22.

a) Valid for torque transmission only
b) Valid for standard clamping hub diameter
c) Refers to center of the output shaft or flange
d) Please reduce input speed at higher ambient temperatures
e) Valid for: Smooth shaft

View A

View B

Motor shaft diameter [mm]

1-stage

up to 19 [4)] (E [5)]) clamping hub diameter

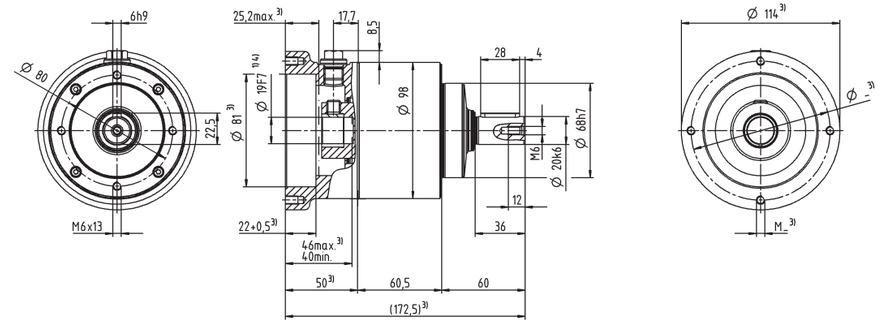

2-stage

up to 19 [4)] (E [5)]) clamping hub diameter

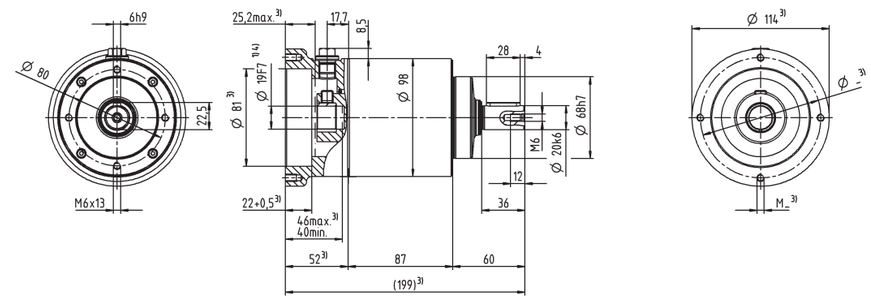

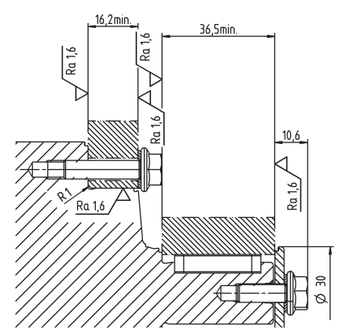

Other output variants

Smooth shaft

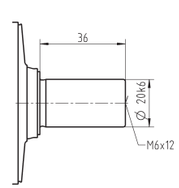

Non-tolerated dimensions are nominal dimensions
1) Check motor shaft fit
2) Min. / Max. permissible motor shaft length
Longer motor shafts are possible, please contact alpha
3) The dimensions depend on the motor
4) Smaller motor shaft diameter is compensated by a bushing with a minimum thickness of 1 mm
5) Standard clamping hub diameter

HDV 035 MF 1-/2-stage

			1-stage				2-stage						
Ratio	*i*		**4**	**5**	**7**	**10**	**16**	**20**	**25**	**35**	**50**	**70**	**100**
Max. torque [a) b) e)]	T_{2a}	*Nm*	320	320	320	288	320	320	320	320	320	320	288
		in.lb	2832	2832	2832	2549	2832	2832	2832	2832	2832	2832	2549
Max. acceleration torque [e)] (max. 1000 cycles per hour)	T_{2B}	*Nm*	200	200	200	180	200	200	200	200	200	200	180
		in.lb	1770	1770	1770	1593	1770	1770	1770	1770	1770	1770	1593
Emergency stop torque [a) b)] (permitted 1000 times during the service life of the gearbox)	T_{2Not}	*Nm*	480	480	480	480	480	480	480	480	480	480	480
		in.lb	4248	4248	4248	4248	4248	4248	4248	4248	4248	4248	4248
Permitted average input speed [d)] (at T_{2a} and 20 °C ambient temperature)	n_{1N}	*rpm*	2000	2000	2000	2000	2600	2600	2600	2600	2600	2600	2600
Max. input speed	n_{1Max}	*rpm*	4800	4800	4800	4800	4800	4800	4800	4800	4800	4800	4800
Mean no load running torque [b)] (at n_1 = 3000 rpm and 20 °C gearbox temperature)	T_{012}	*Nm*	0.5	0.5	0.5	0.5	0.5	0.5	0.5	0.5	0.5	0.5	0.5
		in.lb	4.4	4.4	4.4	4.4	4.4	4.4	4.4	4.4	4.4	4.4	4.4
Max. backlash	j_t	*arcmin*	≤ 10				≤ 15						
Torsional rigidity [b)]	C_{t21}	*Nm/arcmin*	24	24	24	24	24	24	24	24	24	24	24
		in.lb/arcmin	212	212	212	212	212	212	212	212	212	212	212
Max. axial force [c)] (Standard / HIGH FORCES)	F_{2AMax}	*N*	1700 / 3000				1700 / 3000						
		lb_f	383 / 675				383 / 675						
Max. lateral force [c)] (Standard / HIGH FORCES)	F_{2QMax}	*N*	1200 / 4250				1200 / 4250						
		lb_f	270 / 956				270 / 956						
Max. tilting moment (Standard / HIGH FORCES)	M_{2KMax}	*Nm*	95 / 407				95 / 407						
		in.lb	841 / 3602				841 / 3602						
Efficiency at full load	α	%	97				95						
Service life	L_h	*h*	> 20000				> 20000						
Weight (incl. standard adapter plate)	*m*	*kg*	13.6				16.6						
		lb_m	30				37						
Operating noise (at reference ratio and reference speed – ratio-specific values available in cymex®)	L_{PA}	*dB(A)*	≤ 68				≤ 68						
Max. permitted housing temperature		*°C*	+90				+90						
		°F	+194				+194						
Ambient temperature		*°C*	–25 to +40				–25 to +40						
		°F	–13 to +104				–13 to +104						
Lubrication			Lubricated for life										
Direction of rotation			In- and output same direction										
Protection class			IP 69X										
Mass moment of inertia (relates to the drive) Clamping hub diameter [mm] G 24	J_1	*kgcm²*	2.6	2.3	2	1.8	2.3	2.1	2.1	1.9	1.8	1.8	1.8
		10^{-3} *in.lb.s²*	2.3	2	1.8	1.6	2	1.9	1.9	1.7	1.6	1.6	1.6

Please use our sizing software cymex® for a detailed sizing – **www.wittenstein-cymex.com**

Assembly accessories:
There is an optional mounting kit available for this gearbox that includes stainless steel screws, discs, seals and O-rings. For more information, see page 22.

[a)] Valid for torque transmission only
[b)] Valid for standard clamping hub diameter
[c)] Refers to center of the output shaft or flange
[d)] Please reduce input speed at higher ambient temperatures
[e)] Valid for: Smooth shaft

View A

View B

Motor shaft diameter [mm]

1-stage

up to 24 [4)] (G) [5)] clamping hub diameter

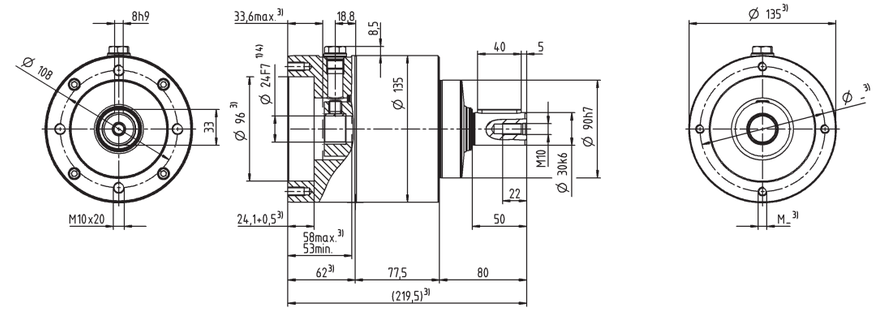

2-stage

up to 24 [4)] (G) [5)] clamping hub diameter

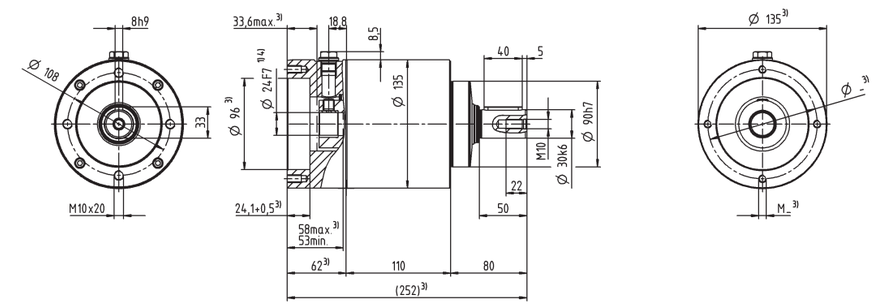

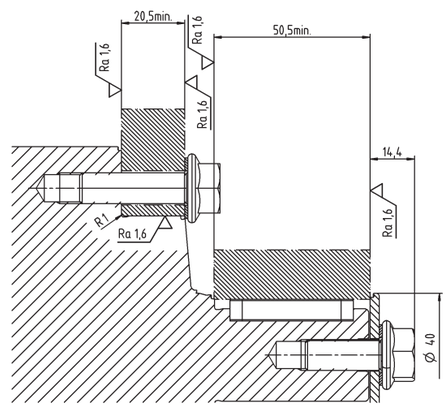

Other output variants

Smooth shaft

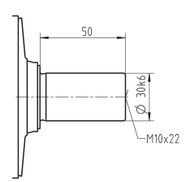

Non-tolerated dimensions are nominal dimensions
[1)] Check motor shaft fit
[2)] Min. / Max. permissible motor shaft length
Longer motor shafts are possible, please contact alpha
[3)] The dimensions depend on the motor
[4)] Smaller motor shaft diameter is compensated by a bushing with a minimum thickness of 1 mm
[5)] Standard clamping hub diameter

HDP+ 010 MA 2-stage

			2-stage			
Ratio	*i*		**22**	**27.5**	**38.5**	**55**
Max. torque [a) b)]	T_{2a}	*Nm*	252	252	252	252
		in.lb	2230	2230	2230	2230
Max. acceleration torque [b)] (max. 1000 cycles per hour)	T_{2B}	*Nm*	185	185	185	185
		in.lb	1637	1637	1637	1637
Nominal torque (at n_{1N})	T_{2N}	*Nm*	140	137	139	147
		in.lb	1242	1213	1230	1303
Emergency stop torque [a) b)] (permitted 1000 times during the service life of the gearbox)	T_{2Not}	*Nm*	525	525	525	525
		in.lb	4647	4647	4647	4647
Permitted average input speed [d)] (at T_{2N} and 20 °C ambient temperature)	n_{1Max}	*rpm*	4000	4000	4000	4000
Max. input speed	n_{1Max}	*rpm*	7500	7500	7500	7500
Mean no load running torque [b)] (at n_1 = 3000 rpm and 20 °C gearbox temperature)	T_{012}	*Nm*	0.52	0.47	0.38	0.38
		in.lb	4.6	4.2	3.4	3.4
Max. backlash	j_t	*arcmin*	≤ 1			
Torsional rigidity [b)]	C_{121}	*Nm/arcmin*	43	43	43	42
		in.lb/arcmin	381	381	381	372
Tilting rigidity	C_{2K}	*Nm/arcmin*	225			
		in.lb/arcmin	1991			
Max. axial force [c)]	M_{2KMax}	*Nm*	2795			
		in.lb	629			
Max. tilting moment	M_{2KMax}	*Nm*	400			
		in.lb	3540			
Efficiency at full load	L_h	*h*	94			
Service life	L_h	*h*	> 20000			
Weight (incl. standard adapter plate)	*m*	*kg*	7.3			
		lb_m	16.1			
Operating noise (at reference ratio and reference speed – ratio-specific values available in cymex®)	L_{PA}	*°C*	≤ 56			
Max. permitted housing temperature		*°F*	+90			
		°C	194			
Ambient temperature		*°F*	–15 to +40			
		°F	5 to 104			
Lubrication			Lubricated for life			
Direction of rotation			In- and output same direction			
Protection class			IP 69X			
Mass moment of inertia (relates to the drive) C 14	J_1	$kgcm^2$	0.21	0.18	0.16	0.14
		10^{-3} $in.lb.s^2$	0.19	0.16	0.14	0.12
Clamping hub diameter [mm] E 19	J_1	$kgcm^2$	0.52	0.50	0.47	0.46
Optimized mass inertia version available on request		10^{-3} $in.lb.s^2$	0.46	0.44	0.42	0.41

Please use our sizing software cymex® for a detailed sizing – **www.wittenstein-cymex.com**

Assembly accessories:
There is an optional mounting kit available for this gearbox that includes stainless steel screws, discs, seals and O-rings. For more information, see page 22.

[a)] At max. 10 % M_{2KMax}
[b)] Valid for standard clamping hub diameter
[c)] Refers to center of the output shaft or flange
[d)] Please reduce input speed at higher ambient temperatures

View A View B

2-stage

Motor shaft diameter [mm]

up to 14 [4)] (C)[5)] clamping hub diameter

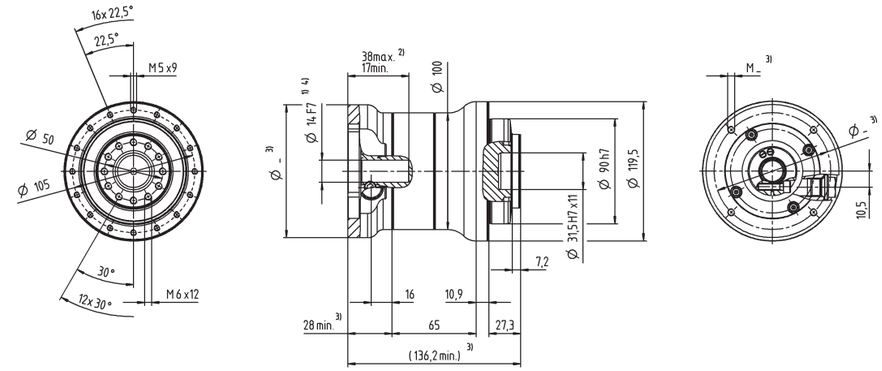

up to 19 [4)] (E) clamping hub diameter

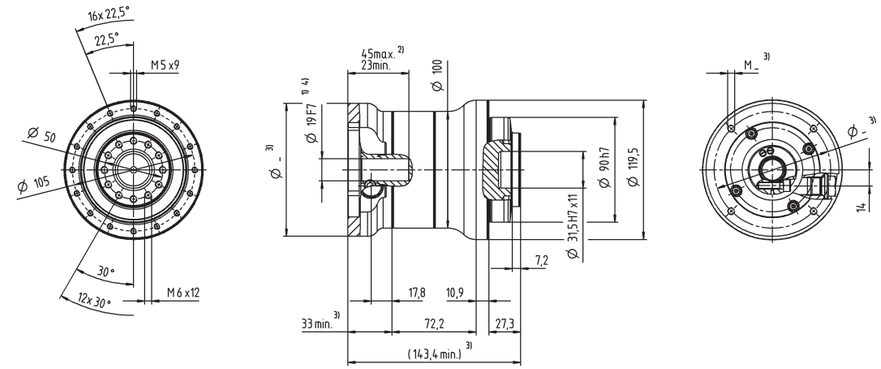

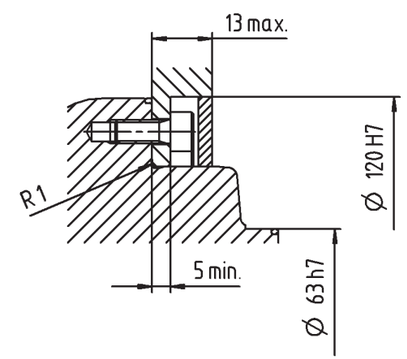

Non-tolerated dimensions are nominal dimensions
[1)] Check motor shaft fit
[2)] Min. / Max. permissible motor shaft length
Longer motor shafts are possible, please contact alpha
[3)] The dimensions depend on the motor
[4)] Smaller motor shaft diameter is compensated by a bushing with a minimum thickness of 1 mm
[5)] Standard clamping hub diameter

HDP+ 025 MA 2-stage

			2-stage			
Ratio	*i*		**22**	**27.5**	**38.5**	**55**
Max. torque [a) b)]	T_{2a}	*Nm*	466	466	466	466
		in.lb	4128	4128	4128	4128
Max. acceleration torque [b)] (max. 1000 cycles per hour)	T_{2B}	*Nm*	425	425	425	425
		in.lb	3762	3762	3762	3762
Nominal torque (at n_{1N})	T_{2N}	*Nm*	312	314	371	413
		in.lb	2762	2775	3286	3652
Emergency stop torque [a) b)] (permitted 1000 times during the service life of the gearbox)	T_{2Not}	*Nm*	1200	1200	1200	1200
		in.lb	10621	10621	10621	10621
Permitted average input speed [d)] (at T_{2N} and 20 °C ambient temperature)	n_{1Max}	*rpm*	3500	3500	3500	3500
Max. input speed	n_{1Max}	*rpm*	7500	7500	7500	7500
Mean no load running torque [b)] (at n_1 = 3000 rpm and 20 °C gearbox temperature)	T_{012}	*Nm*	1.0	0.87	0.78	0.70
		in.lb	9.2	7.7	6.9	6.2
Max. backlash	j_t	*arcmin*	≤ 1			
Torsional rigidity [b)]	C_{121}	*Nm/arcmin*	100	100	100	100
		in.lb/arcmin	885	885	885	885
Tilting rigidity	C_{2K}	*Nm/arcmin*	550			
		in.lb/arcmin	4868			
Max. axial force [c)]	M_{2KMax}	*Nm*	4800			
		in.lb	1080			
Max. tilting moment	M_{2KMax}	*Nm*	550			
		in.lb	4868			
Efficiency at full load	L_h	*h*	94			
Service life	L_h	*h*	> 20000			
Weight (incl. standard adapter plate)	*m*	*kg*	11.1			
		lb_m	24.5			
Operating noise (at reference ratio and reference speed – ratio-specific values available in cymex®)	L_{PA}	*°C*	≤ 58			
Max. permitted housing temperature		*°F*	+90			
		°C	194			
Ambient temperature		*°F*	–15 to +40			
		°F	5 to 104			
Lubrication			Lubricated for life			
Direction of rotation			In- and output same direction			
Protection class			IP 69X			
Mass moment of inertia (relates to the drive) — E 19	J_1	$kgcm^2$	0.87	0.70	0.60	0.55
		10^{-3} $in.lb.s^2$	0.77	0.62	0.53	0.49
Clamping hub diameter [mm] — G 24	J_1	$kgcm^2$	2.39	2.22	2.12	2.07
Optimized mass inertia version available on request		10^{-3} $in.lb.s^2$	2.12	1.96	1.88	1.83

Please use our sizing software cymex® for a detailed sizing – **www.wittenstein-cymex.com**

Assembly accessories:
There is an optional mounting kit available for this gearbox that includes stainless steel screws, discs, seals and O-rings. For more information, see page 22.

[a)] At max. 10 % M_{2KMax}
[b)] Valid for standard clamping hub diameter
[c)] Refers to center of the output shaft or flange
[d)] Please reduce input speed at higher ambient temperatures

View A

View B

2-stage

Motor shaft diameter [mm]

up to 19 [4)] (E)[5)] clamping hub diameter

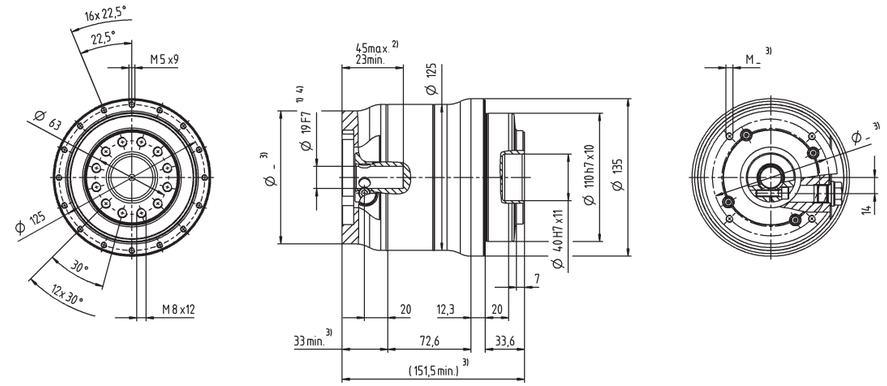

up to 24 [4)] (G) clamping hub diameter

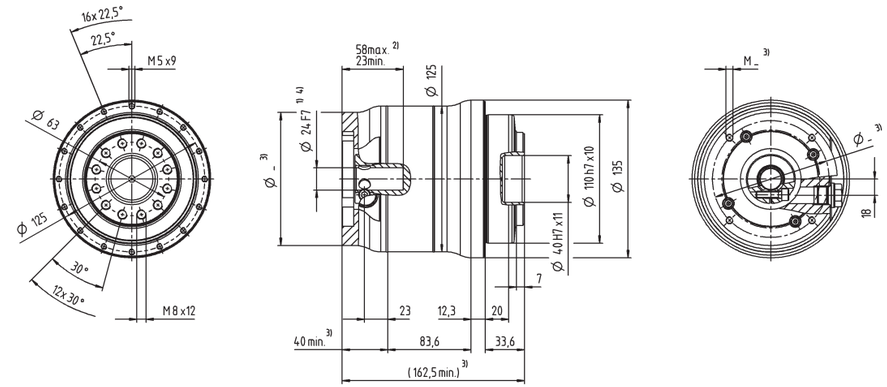

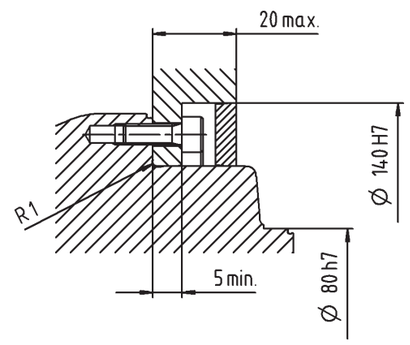

Non-tolerated dimensions are nominal dimensions
[1)] Check motor shaft fit
[2)] Min. / Max. permissible motor shaft length
Longer motor shafts are possible, please contact alpha
[3)] The dimensions depend on the motor
[4)] Smaller motor shaft diameter is compensated by a bushing with a minimum thickness of 1 mm
[5)] Standard clamping hub diameter

HDP+ 050 MA 2-stage

			2-stage			
Ratio	*i*		**22**	**27.5**	**38.5**	**55**
Max. torque [a) b)]	T_{2a}	*Nm*	1121	1121	1121	1121
		in.lb	9925	9925	9925	9925
Max. acceleration torque [b)] (max. 1000 cycles per hour)	T_{2B}	*Nm*	795	795	795	795
		in.lb	7036	7036	7036	7036
Nominal torque (at n_{1N})	T_{2N}	*Nm*	523	566	638	717
		in.lb	4632	5005	5649	6348
Emergency stop torque [a) b)] (permitted 1000 times during the service life of the gearbox)	T_{2Not}	*Nm*	2375	2375	2375	2375
		in.lb	21021	21021	21021	21021
Permitted average input speed [d)] (at T_{2N} and 20 °C ambient temperature)	n_{1Max}	*rpm*	3000	3000	3000	3000
Max. input speed	n_{1Max}	*rpm*	6250	6250	6250	6250
Mean no load running torque [b)] (at n_1 = 3000 rpm and 20 °C gearbox temperature)	T_{012}	*Nm*	2.7	2.4	2.1	1.7
		in.lb	23.9	21.2	18.9	15.0
Max. backlash	j_t	*arcmin*	≤ 1			
Torsional rigidity [b)]	C_{121}	*Nm/arcmin*	210	210	210	210
		in.lb/arcmin	1859	1859	1859	1859
Tilting rigidity	C_{2K}	*Nm/arcmin*	560			
		in.lb/arcmin	4956			
Max. axial force [c)]	M_{2KMax}	*Nm*	6130			
		in.lb	1379			
Max. tilting moment	M_{2KMax}	*Nm*	1335			
		in.lb	11816			
Efficiency at full load	L_h	*h*	94			
Service life	L_h	*h*	> 20000			
Weight (incl. standard adapter plate)	*m*	*kg*	21.9			
		lb_m	48.4			
Operating noise (at reference ratio and reference speed – ratio-specific values available in cymex®)	L_{PA}	*°C*	≤ 60			
Max. permitted housing temperature		*°F*	+90			
		°C	194			
Ambient temperature		*°F*	–15 to +40			
		°F	5 to 104			
Lubrication			Lubricated for life			
Direction of rotation			In- and output same direction			
Protection class			IP 69X			
Mass moment of inertia (relates to the drive) G 24	J_1	$kgcm^2$	3.80	3.33	3.00	2.80
Clamping hub diameter [mm]		10^{-3} $in.lb.s^2$	3.36	2.95	2.66	2.48
Optimized mass inertia version available on request K 38	J_1	$kgcm^2$	10.7	10.3	9.90	9.70
		10^{-3} $in.lb.s^2$	9.47	9.12	8.76	8.58

Please use our sizing software cymex® for a detailed sizing – **www.wittenstein-cymex.com**

Assembly accessories:
There is an optional mounting kit available for this gearbox that includes stainless steel screws, discs, seals and O-rings. For more information, see page 22.

a) At max. 10 % M_{2KMax}
b) Valid for standard clamping hub diameter
c) Refers to center of the output shaft or flange
d) Please reduce input speed at higher ambient temperatures

View A

View B

2-stage

Motor shaft diameter [mm]

up to 24 [4)] (G) [5)] clamping hub diameter

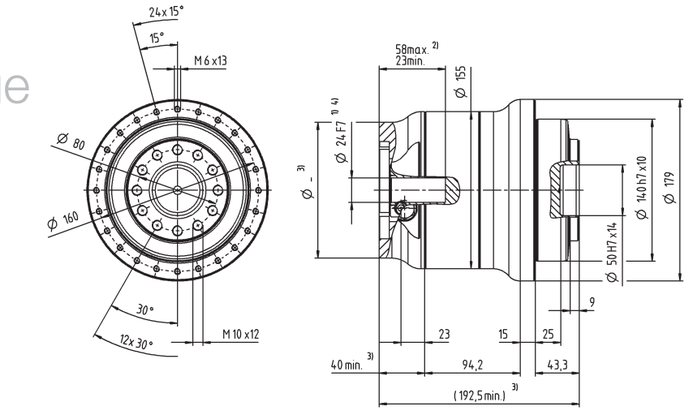

up to 38 [4)] (K) clamping hub diameter

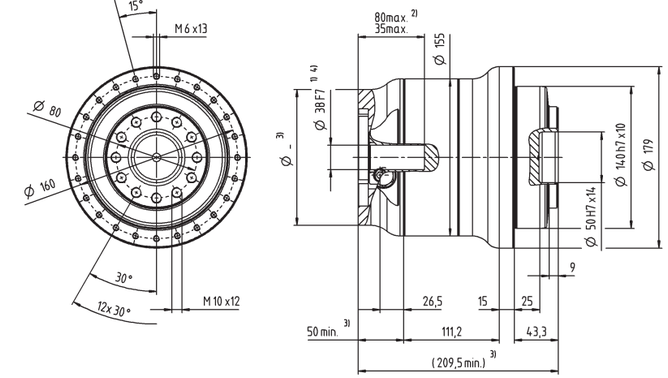

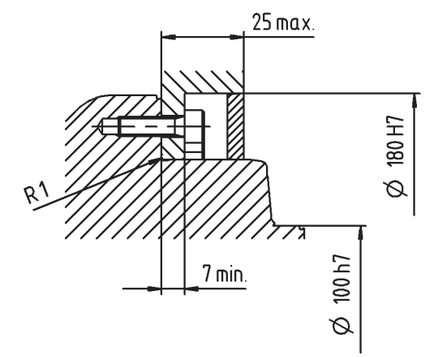

Non-tolerated dimensions are nominal dimensions
1) Check motor shaft fit
2) Min. / Max. permissible motor shaft length
Longer motor shafts are possible, please contact alpha
3) The dimensions depend on the motor
4) Smaller motor shaft diameter is compensated by a bushing with a minimum thickness of 1 mm
5) Standard clamping hub diameter

Mounting kit – Hygienic mounting

Hygienically safe mounting

Our Hygienic Design Gearboxes have been designed for applications that require maximum cleanability and leak tightness. To meet these requirements in a comprehensive approach all the way to the connection of the gearbox, the gearbox must be mounted to the gearbox in a tailor-made and hygienically safe manner. For this end we have developed special mounting kits to ensure a hygienic connection with maximum process reliability. The sealing parts and screws included in the mounting kits prevent hygienic weak spots and seal cavities on the application side.

HDV:

The mounting kit for our HDV includes:

- O-rings to seal the direct contact surfaces between gearbox and machine
- a suitable stainless steel screw set with screw head seals for assembly to the machine
- a disc to seal the centering in the output shaft

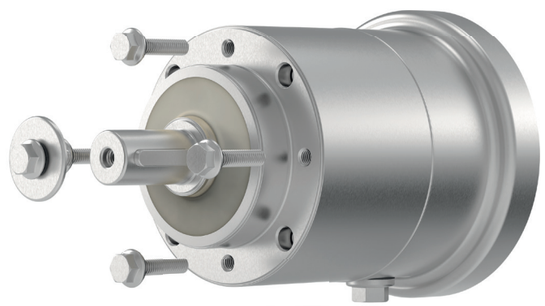

HDP⁺:

The hygienic mounting kit for our HDP⁺ includes:

- O-rings to seal the direct contact surfaces between gearbox and machine
- a suitable screw set for assembly to the machine
- a sealing disc for the final sealing of the flange connection

Advantages for you:

- Procure tailor-made screws that conform to hygiene standards from a single source
- Take advantage of the opportunities to save storage capacities by packaging of the mounting material
- Benefit from a comprehensive solution for maximum process reliability

If you have any questions, please don't hesitate to contact your sales representative or WITTENSTEIN alpha.

Ordering code – Planetary gearbox

HDP 025 S – M A 2 – 38,5 – 0 G 1 – 2 S

Product type
HDP⁺
HDV

Size
010 – 050
015 – 035

Characteristic
S = Standard
Z = Special model (electropolished for HDV)

Gearbox variant
M = Motor-mounted

Gearbox model
F = Standard
A = HIGH TORQUE (HDP⁺)
T = HIGH FORCES (HDV)

Number of stages
1 = 1 (HDV)
2 = 2 (HDV, HDP⁺)

Ratio

Output shape (HDV)
0 = Smooth shaft
1 = Shaft with key

Clamping hub diameter
(see table)
For self-contained version: input shaft shape

Output shape (HDP⁺)
0 = Flange

Backlash
1 = Standard

Generation
2

Motor connection
A = Optimized mass inertia (HDP⁺)
S = Clamping hub socket

Mounting positions and clamping hub diameters

B5
Horizontal

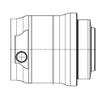

V1
Output vertical downwards

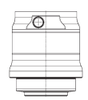

V3
Output vertical upwards

S
Can be tilted ±90° from a horizontal position

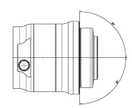

Clamping hub diameter
(see technical data sheet for possible diameters)

Code letter	mm	Code letter	mm
B	11	I	32
C	14	K	38
E	19	M	48
G	24	N	55
H	28	O	60

Intermediate sizes possible using bushings with a minimum thickness of 1 mm.

For information purposes only – not required when placing orders!

Exceptions:
- HDP⁺ is designed for mounting position B5 as standard!
- If the mounting position is different, contact WITTENSTEIN alpha.

WITTENSTEIN | alpha

WITTENSTEIN Inc. · 1249 Humbracht Circle · Bartlett, IL 60103 · USA · Phone 1-630-540-5300

WITTENSTEIN alpha – Intelligent drive systems

www.wittenstein-us.com

The entire world of drive technology – Catalogs available on request or online at www.wittenstein-us.com/catalogs

alpha Premium Line. Unique, individual solutions that offer unparalleled power density.

alpha Advanced Line. Maximum power density and outstanding positioning accuracy for complex applications.

alpha Basic Line & alpha Value Line. Reliable, flexible and economical solutions for a wide range of applications.

alpha Linear Systems. Precise, dynamic system solutions for every requirement.

alpha Mechatronic Systems. Energy-efficient, versatile and flexible mechatronic drive systems.

alpha Accessories. Optimally designed and adapted for gearboxes and actuators.